Baumer
Passion for Sensors

Effective tool change cleverly designed with inductive miniature sensors

In modern processing centers, inductive sensors are the components of choice for monitoring the motor spindle clamping process. Integrated into the spindle, they must be exceptionally small and offer high repeatability to ensure smooth tool changing at all times. Baumer offers a high-performance portfolio of miniature sensors for the intelligent design of effective spindle solutions. This can either involve a classic design with three switching sensors or a smart design with one measurement sensor.



Rather than detecting the three positions of the drawbar with switching sensors, an analog inductive distance sensor offers an alternative solution.

Tool change in fully automated processing centers, from removal until the insertion of the new tool in the spindle, takes less than a second. To achieve maximum system effectiveness, this process must function with ultimate reliability. The error-free functioning of the smallest inductive sensors plays a major role in ensuring this. For the processing center to function error-free, the machine control requires the following key information regarding the status of the collet chuck: open and no tool clasped, closed and no tool clasped, or closed and tool clasped. The answer to this challenge are inductive sensors. The task can be handled using either one measurement sensor or three switching inductive sensors.

Largest portfolio, smallest sensors

In drive and clamping solutions, the sensor technology is integrated in the motor spindle. Given this confined space, the sensors must therefore be as small as possible, yet very powerful – characteristics found in the sensors from Baumer. The Swiss sensor manufacturer offers the market's largest portfolio of miniature and subminiature inductive sensors with micrometer measuring accuracy. One example is the inductive proximity sensor IFRM 03 with a diameter of only 3 mm. It is available in various lengths starting at a mere 12 mm. Yet its miniature housing contains the complete evaluation electronics that are responsible for the high-repeatability switching points as well as the precise analog measurement values. In addition, these industrialgrade sensors are robust, EMC-stable, and comply with the protection class IP 67. The sensors remain unaffected by heat, oily environments, and vibrations that normally occur in tooling machines. This is where the decades of experience of Baumer in miniature sensor technology come to play.

Measuring instead of switching

Rather than detecting the three positions of the drawbar with switching sensors, an analog inductive distance sensor offers an alternative solution. It requires a steep angle taper on the drawbar rather than a retainer. With a steep angle taper connected to the drawbar, it is possible for the measuring sensor to detect the position of the drawbar and thus recognize the state of the collet chuck. The distances or the respective clamping values that are evaluated by the control can be allocated to the three positions of the bar. The use of a measurement sensor offers a number of advantages – on the one hand, the sensor requires less space than three individual switching sensors and also less mounting effort. On the other hand, the sensor constantly monitors the state of the tool clamp. This makes it possible, for example, to detect when the tool becomes loose or



Besides high-precision detection of the tool changer's rod position at electric spindles, *AlphaProx*® sensors detect even the slightest perturbation - such as chips between tool and spindle.



Small and powerful – the Swiss sensor manufacturer Baumer offers a large portfolio of miniature and sub-miniature inductive sensors with micrometer measuring accuracy. The portfolio of proximity switches and analog sensors offers maximum flexibility for reliable solutions for the tool clamping process.

is not clasped centrally. This may happen if chips fall between the spindle and the tool. It can result in damage to the tool or quality problems of the machined part. The precise sensors from Baumer optimize the repeatability of the tool clamping. This minimizes a potential lack of concentric runout of the used tool or detects it early on. A measuring sensor improves the reliability of the clamping system while ensuring both the quality of the processing as well as system availability, which is reflected in increased overall system effectiveness. This requires micrometer precision of the sensor, a detection range that is as large as possible, and a limited temperature drift. In this regard, *AlphaProx*®, the smallest inductive distance sensors from Baumer, offer the highest performance on the market. The reliable measured values and high precision ensure users a maximum reproducibility for tool tensioning.

Baumer has introduced one of the smallest distance measurement inductive sensors on the market – the inductive analog sensor IF08. This product series has a boxshaped housing measuring 16 × 8 × 4.7 mm. Nevertheless, it contains the entire evaluation electronics and a drilled hole for flexible mounting even in confined mounting spaces. Its measuring distance is 2 mm with an output signal of 0 – 10 VDC.

Flexible with IO-Link

Even greater flexibility is offered by the miniature distance measurement inductive sensor of the IR06 series with digital IO-Link interface with a housing that is only 6.5 mm thick and 46 mm long. The standardized interface allows the easy integration of the clamping process into the control. The collected data can be recorded and evaluated via a histogram. This allows the early detection of measurement deviations and facilitates required error analyses. For example, the smallest changes in the process can be detected via the vibration and addressed before the machined part is damaged. The sensor also provides additional diagnosis data, for example, the temperature of the sensor, which the tooling machine designers can use to indirectly recognize the heating up of the spindle. In addition, the

sensor offers all the advantages of IO-Link, such as easy parameterization and quick commissioning of a replacement sensor, by downloading the parameters from the IO-Link master based on the parameter server function.

No restrictions with sensors from Baumer

The comprehensive portfolio of miniature inductive sensors offers users maximum flexibility for reliable solutions in the tool clamping process. The customer can choose whether the clamping process is monitored by switching sensors or a measurement sensor – without restrictions or limitations.

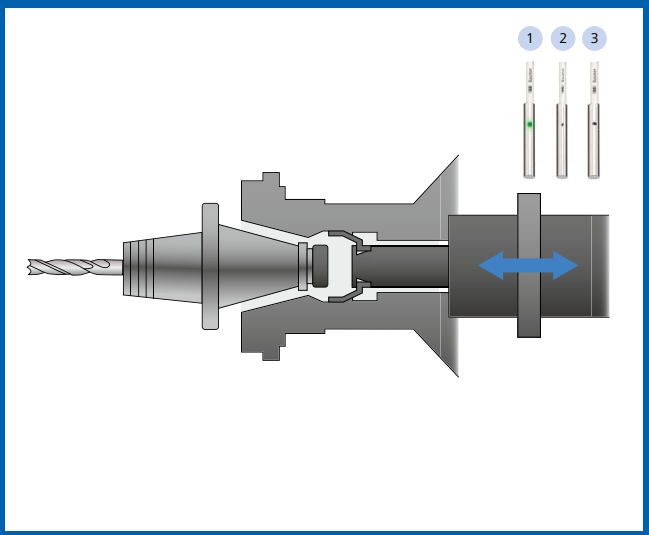

The green illuminated LED of the inductive proximity switch at position 1 signals the detection of the retainer on the drawbar. In this position, the control is informed that the collet chuck is open and no tool is clasped. Upon axial displacement of the drawbar and thus the retainer, the inductive sensors at position 2 and 3 switch as soon as the retainer moves to their detection range. These in turn transmit the assigned status "Collet chuck closed and no tool clasped" or "Collet chuck closed and tool clasped".

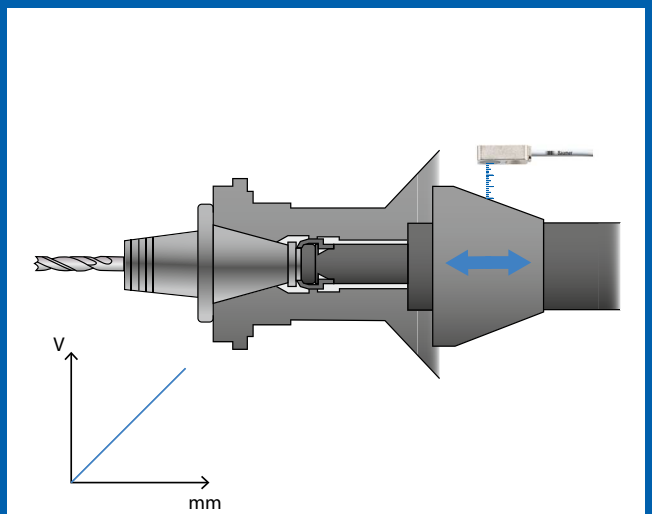

The miniature analog sensor records the position of the drawbar through different distances or clamping values from the steep angle taper that are evaluated in the control. This way, the three states of the collet chuck are transferred to the control.

Further information:
Switching subminiature and miniature sensors
www.baumer.com/inductive

Measuring subminiature and miniature sensors
www.baumer.com/alphaprox



Author
Silvio Sprenger
Product Manager

Baumer Group
Phone +41 52 728 1122
sales@baumer.com
www.baumer.com