Baumer
Passion for Sensors

Technical Report

5 astonishing solutions with precision sensors

Extremely precise: where little inductive sensors measure ton-weighing loads

Present-day measuring inductive sensors are that precise and compact that they replace even complex measuring systems. In numerous applications, they are the smart and efficient way for detecting important machine data - from measuring weight at gantry cranes to chip detection in machine tooling.



Figure 1

Figure 1: The Baumer inductive sensors offer unrivaled precision down to 5 µm and hence are the key to ingeniously simple solutions: from cost-efficient weight measurement at gantry cranes to fast-as-lightning angle measurement at prostheses.

Inductive sensors are true workhorses in factory automation. Installed in their millions, they silently perform hundreds of standard tasks in industrial automation. Most often, they are just expected to function reliably while being cost-efficient in parallel. However, behind the common and widespread use of such standard inductive sensors lies a huge potential which just needs to be awakened. The measuring AlphaProx inductive sensors from Baumer featuring fully integrated electronics are a good example. They measure distance with precision down to 5 µm at resolutions of up to 4 nm. Extremely precise but yet space-saving, these sensors open up completely new application potentials. Sometimes, these small precision wonders entirely replace expensive measuring systems at significantly lower cost. The following solutions demonstrate what high-precision inductive sensors can do in the hands of inventive and creative engineers.

Solution 1: Weight measurement at gantry cranes

Gantry cranes in steelworks or shipyards often carry loads weighing several tons which have to be measured with a precision down to just few kilograms. Usually, sturdy heavy-duty weighing

systems withstanding such extreme tension stress are deployed. The higher the weighing range, the heavier and more expensive the weighing system. Weighing operations are much more cost-efficient when not done straight in the force flow, but by indirect weight measurement. Alternatively, weight measurement can utilize the deflection of the crane boom where the load is being suspended.

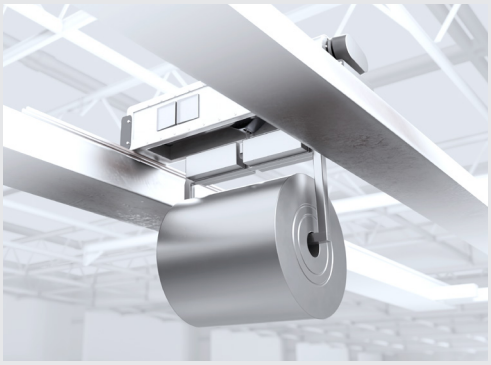

Weight measurement on gantry cranes
In steelworks, Baumer inductive sensors enable the cost-efficient measurement of heavy loads and thus offer an attractive alternative to expensive high-load crane scales.

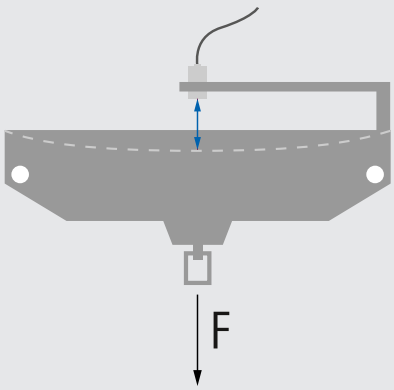

High-precision AlphaProx sensors determine the deflection of the crossbeam on which the load is suspended and thus its weight.

Since the deflection is in the micrometer range, such indirect weight measurement can only be done by high-performance sensors. With unrivaled precision, the AlphaProx inductive sensors by Baumer are up to it and for the first time make this smart and maintenance-free principle of weight measurement available by using industrial inductive sensors. Weight measurement with precision down to few kilograms corresponds to a deviation of just 0.05 percent, depending on the weighing range. Cost savings however are significant: approx. 10,000 Euros for a high-load crane weighing system versus around 300 Euros for an AlphaProx precision inductive sensor.

Solution 2: Measuring blade strain on wind turbines

The adjustable rotor blades of wind turbines play a decisive role in safe and efficient operation. The wind load is regulated by adjusting the blade position to optimize power harvest and to eliminate overload when winds are high. This calls for precise measurement of the wind load acting on the blades. Typically, optical measuring systems installed inside the rotor blades are used here. These systems measure the blade deflection which often can reach hundred meters and even more. But this method is expensive, since further to the measuring system cost there are high labor costs by complex fiber optics installation inside the blade.

Baumer inductive sensors are the easy and cost-efficient alternative. The AlphaProx sensors measure the blade strain with the precision of optical measuring systems - but entail significantly less effort. Simple distance measurement at the blade base determines the wind load. The measuring equipment is attached to the blade at two points close to each other: high-precision Baumer inductive sensor at one point, a metal rod on the other. The blade's stretching or compression resulting from the wind load changes the distance between sensor and the metal rod. Furthermore, the vibration data from the Baumer IO-Link inductive sensors deliver valuable secondary information on the blade condition, such as icing or cracks. This and many more applications benefit from the smart Baumer sensors in two ways: valuable secondary data and quick and convenient sensor parameterization by tools like the Baumer Sensor Suite.

Solution 3: Chip detection at machine tools

In CNC tooling machines, electronic spindles with automated tool changers are central components. A standard application for inductive sensors is status detection at the chucks (open, closed with tool, closed

without tool). In general, one switching inductive sensor each is deployed to detect each individual status. Alternatively, a measuring sensor detects the exact position of the pull rod by distance. The AlphaProx sensors go one step further. They measure the position of the pull rod so precisely that they can detect even tiny chips between tool and spindle. These foreign particles interfere with the form fit which may produce unclean results. Detecting any chip presence, the compact and easy-to-integrate AlphaProx sensors prevent this and hence ensure reliable and precise milling results.

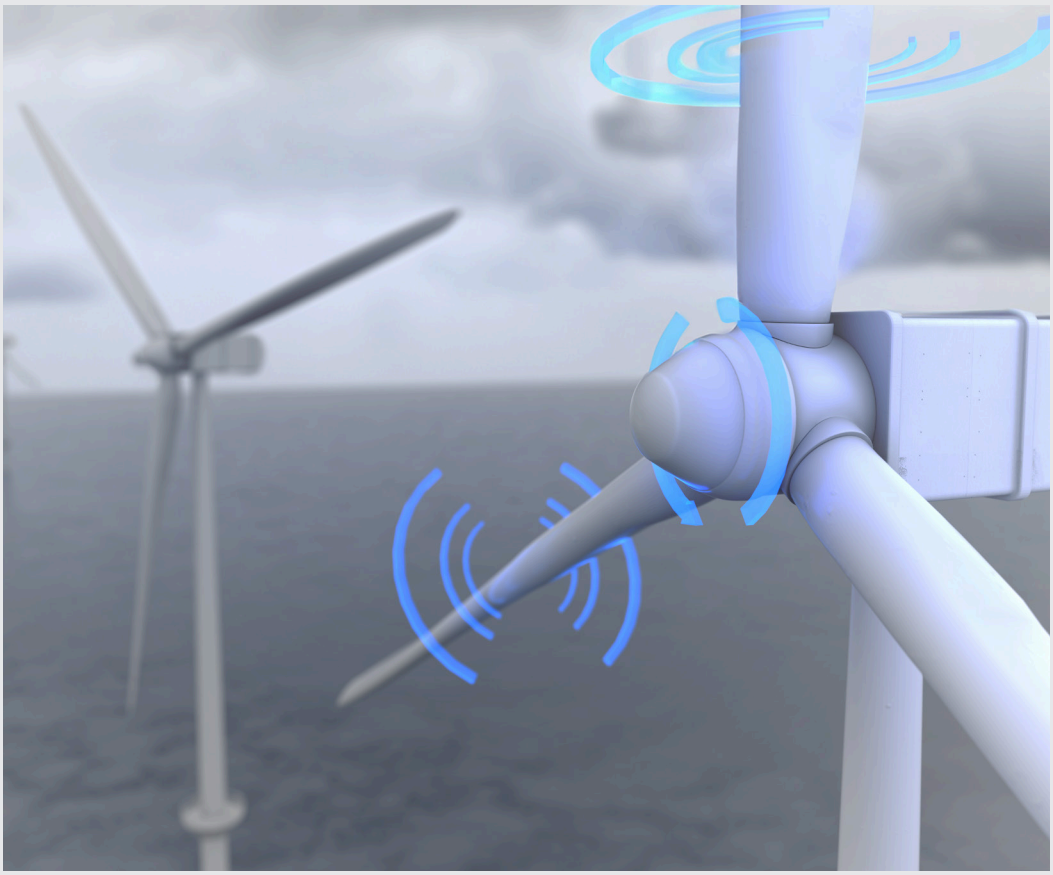

Wind load measurement on wind turbines
The wind load can be regulated by specifically adjusting the rotor blade position of a wind turbine in order to optimize power generation and avoid overloads in stronger winds. This requires precise measurement of the wind load acting on the rotor blades.

A simple solution to wind load measurement: the stretching or compression of the rotor blade as a result of the wind load leads to a change in the distance between the sensor and the metal rod. The high-precision AlphaProx sensors can monitor this distance and thus determine the wind load with little effort.

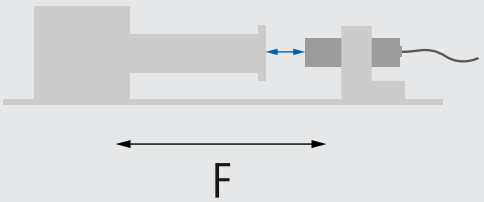

Solution 4: Measuring the degree of sharpness at cutting blades

From harvesters in corn fields on to industrial packaging systems: Sharp cutting blades are essential in varied processes and applications. Blunt blades impair quality and, worst case, entail unplanned servicing. As a precaution, the blades undergo sharpening or replacement after specified maintenance intervals. For this reason, blades are sharpened oder may be replaced when their cutting performance is actually still good. Such waste of resources can be avoided by intelligent inline monitoring of the blade sharpness. Baumer inductive sensors make their contribution here by precisely measuring the head width and hence the blade sharpness during operation. This information allows for sharpening the blade exactly when required. Smart functions and filters ensure optimum results and simplify the integration task which is supposed to be rather complex.

Chip detection in machine tools
In CNC machines with automatic tool changers, inductive sensors detect the status of the chuck (open or closed) by measuring the distance.

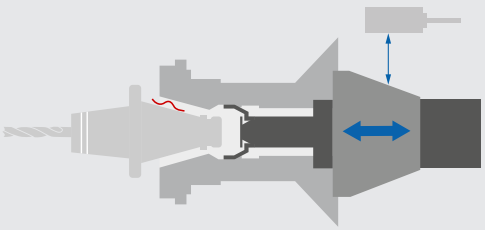

AlphaProx sensors measure the position of the drawbar so precisely that they detect even tiny chips between the tool and spindle that interfere with the form fit.

Solution 5: Angular measurement at prostheses

Compact and smart inductive sensors are also the starting point for innovative solutions apart from industrial applications. In medical products such as prosthesis they enable their wearers to regain lost quality of life. Another application example is microprocessor-controlled knee prostheses in which AlphaProx sensors determine the joint flexion in real time. By distance measurement a smart miniature sensor continuously detects the angle between artificial knee and lower leg prosthesis. This dynamic data enable precise valve control at the prostheses for optimum flexion resistance. Sports field or sidewalk? A touch of a button opens various prosthesis application profiles for the perfect balance between dynamics and safety.

Sharpening measurement on cutting blades
This is how the sharpness measurement works: AlphaProx inductive sensors precisely measure the head width and therefore the sharpness of the cutting blades during operation. With this data, regrinding can be scheduled precisely as required.

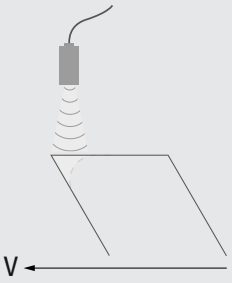

Baumer is technology leader for maximum precision in miniature design

Baumer has been driving the development of position sensors for over 70 years. A primary objective is to achieve maximum measuring precision in a compact design. Two key factors characterize the development and series production at Baumer: First, mechanical stability by a robust, durable design merged with a high-quality sensing element with patented fixation. Second, sophisticated electronics based on in-house development of powerful, compact ASICs and reliable signal processing and calibration.

Conclusion:

In the technology of position sensing, the Baumer inductive sensors offer unrivaled precision down to 5 µm and hence enable ingeniously simple solutions: from cost-efficient weight measurement at gantry



Angle measurement in knee prostheses
In medical products such as knee prostheses, Baumer inductive sensors enable wearers to regain lost quality of life. Image: Adobe Stock

In microprocessor-controlled knee prostheses, Baumer AlphaProx sensors determine the flexion of the knee in real time. A smart miniature sensor continuously measures the angle between the artificial knee and the lower leg prosthesis by measuring the distance. This dynamic data enables the prosthesis to precisely adjust the valve control for optimum flexion resistance.

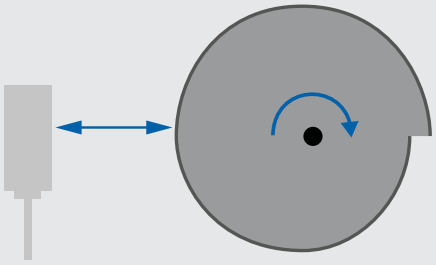

cranes to fast-as-lightning angle measurement at prostheses. The optical and ultrasonic sensors of the Baumer Sensor Toolbox set standards in terms of precision, compactness and reliability when it comes to pushing the limits of technical feasibility.

More information:
www.baumer.com/alphaprox



AUTHOR
Silvio Sprenger
Strategic Product Manager
Inductive Sensor Technology
Baumer

Baumer
Passion for Sensors

Baumer Group
Phone +41 (0)52 728 1122
sales@baumer.com
www.baumer.com