PBMN - high pressure hydrogen measurement

Article number: PBMN-29B##RA11499400010/7912

Overview

- Precision pressure measurement from 0 ... 600 to 0 ... 1200 bar
- Robust stainless steel housing
- Intrinsically safe version (ATEX, IECEx)
- Enhanced life time expectation
  thanks to gold coated contact diaphragm (15 µm)
- Made for hydrogen applications such as hydrogen electrolyzer, pressure monitoring of distribution network, storage station, compressor, dryer, H2-refuelling station and H2-combustion power plant
- Free from oil and grease



Technical data

Performance characteristics	
Pressure type	Relative (gauged)
Compensated temperature range	-40 … 85 °C
Min. measuring span	600 bar
Max. measuring span	1200 bar
Max. measuring error	± 0.2 % FSR Including zero-point and span error, nonlinearity (by terminal base line), hysteresis and non-repeatability (EN 61298-2)
Long term stability	≤ 0.1 % FSR/a
Temperature coefficient	≤ 0.03 % FSR/10 K 0 , measuring span ≤ 0.03 % FSR/10 K 0 , zero point
Standard error of measurement (BFSL)	± 0.08 % FSR Including non-linearity, hysteresis and non-repeatability according BFSL
Step response time	≤ 5 ms
Process conditions	
Process temperature	-40 … 120 °C
Process pressure	Refer to section "Operating conditions"
Process connection	
Connection variants	Refer to section "Dimensional drawings"
Wetted parts material, process connection	AISI 316L (1.4404)
Wetted parts material, membrane	AISI 316L (1.4404) Gold plated 15 µm
Ambient conditions	
Operating temperature range	-40 … 85 °C
Storage temperature range	-40 … 85 °C
Degree of protection (EN 60529)	IP 67 , with connector M12-A, 4-pin
Insulation resistance	> 100 MΩ , 500 V DC

Ambient conditions	
Shock (EN 60068-2-27)	50 g / 11 ms, 100 g / 6 ms, 10 impulses per axis and direction
Vibration (sinusoidal) (EN 60068-2-6)	1.5 mm p-p (10 … 58 Hz), 10 g (58 Hz … 2 kHz), 10 cycles (2.5 h) per axis
Vibration, broad-band random (EN 60068-2-64)	0.1 g² / Hz, > 10 gRMS (20 Hz … 1 kHz), 30 min. per axis
Output signal	
Current output	4 … 20 mA , 2-wire
Load resistance	≥ 5 kΩ
Short circuit protection	Yes
Shunt resistance	Rs ≤ (Vs - 8 V)/0.0205 A
Housing	
Style	Compact transmitter
Overall size	Refer to section "Dimensional drawings"
Material	AISI 316L (1.4404)
Electrical connection	
Connector	M12-A, 4-pin
Power supply	
Voltage supply range	8 … 30 V DC
ATEX II 1/2G Ex ia IIC T4/T6 Ga/Gb	
Please note	For the application in Ex zone you have to respect the conditions mentioned in the type examination certificate (SEV 11 ATEX 0129 / IECEx SEV 22.0006).You will find the relevant certificates and instructions at www.baumer.com
Maximum values for barrier selection, Ui	30 V DC , max.
Maximum values for barrier selection, Ii	100 mA
Maximum values for barrier selection, Pi	750 mW

2025-08-05 The product features and technical data specified do not express or imply any warranty. Technical modifications subject to change.

PBMN - high pressure hydrogen measurement

Article number: PBMN-29B##RA11499400010/7912

Technical data

ATEX II 1/2G Ex ia IIC T4/T6 Ga/Gb	
Internal capacitance, Ci	31 nF
Internal inductance, Li	3 µH
ATEX II 1D Ex ia IIIC T (200) 107°C IP6X Da	
Please note	For the application in Ex zone you have to respect the conditions mentioned in the type examination certificate (SEV 11 ATEX 0129 / IECEx SEV 22.0006).You will find the relevant certificates and instructions at www.baumer.com
Voltage supply range, Un	30 V DC , max.
Degree of protection for cable accessories	IP 65
ATEX II 1G Ex ia IIC T4/T6 Ga	
Please note	For the application in Ex zone you have to respect the conditions mentioned in the type examination certificate (SEV 11 ATEX 0129 / IECEx SEV 22.0006).You will find the relevant certificates and instructions at www.baumer.com

ATEX II 1G Ex ia IIC T4/T6 Ga	
Maximum values for barrier selection, Ui	30 V DC , max.
Maximum values for barrier selection, Ii	100 mA
Maximum values for barrier selection, Pi	750 mW
Internal capacitance, Ci	31 nF
Internal inductance, Li	3 µH
Compliance and approvals	
EMC	EN 61000-6-2 EN 61000-6-3 EN 61326-2-3
Explosion protection	ATEX II 1/2G Ex ia IIC T4/T6 Ga/Gb ATEX II 1D Ex ia IIIC T (200) 107 °C IP6X Da ATEX II 1G Ex ia IIC T4/T6 Ga

Operating conditions

Product designation	Article no.	Measuring range (bar)	Proof pressure (bar)	Burst pressure (bar)
PBMN-29B39RA11499400010/7912	11256055	0 … 600	1200	1800
PBMN-29B41RA11499400010/7912	11256134	0 … 1000	1500	1800
PBMN-29B99RA11499400010/7912	11256079	0 … 1200	1500	1800

Electrical connection

Output type	Equivalent circuit	Electrical connection	Function	Pin assignment
4 … 20 mA (2-wire)	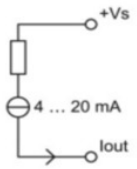	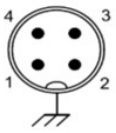	+Vs Iout Frame Ground n.c.	1 3 Plug thread 2, 4

2025-08-05 The product features and technical data specified do not express or imply any warranty. Technical modifications subject to change.

PBMN - high pressure hydrogen measurement

Article number: PBMN-29B##RA11499400010/7912

Dimensional drawings (mm)

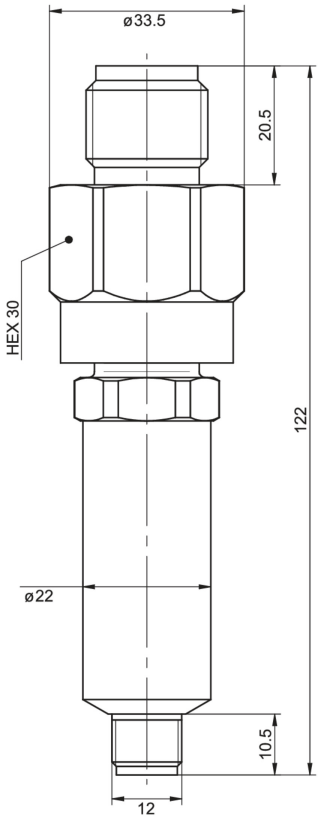

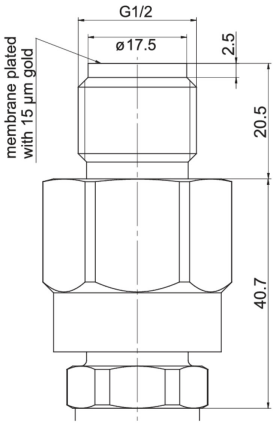

2025-08-05 The product features and technical data specified do not express or imply any warranty. Technical modifications subject to change.