Baumer
Passion for Sensors

Incremental encoder

EHOG1060-E16100012/10

High-performant incremental HeavyDuty encoders for demanding machinery and asynchronous drives

Article number: 11736715

Overview

- Protection IP66, IP67
- Shaft insulation 3.5 kV
- Corrosion protection CX
- Operating temperature -40...+100 °C
- Signal outputs with automatic temperature compensation for stable signals up to 350 m (HTL-P)
- Sealed and user-friendly field termination
- Extended protection circuit
- 4-fold sealing concept for protection against abrasive dust, humid and salty moisture and temperature changes
- Connection: cable 1 m
- Blind hollow shaft ø16 mm
- Pulses per revolution 1024



Picture similar

HUBNER BERLIN
A Baumer Brand

LongLife

HeavyDuty
70 years of experience

Technical data

Technical data - electrical ratings

Voltage supply	4.75...30 VDC (Vin = Vout, HTL/TTL)
Consumption w/o load	≤100 mA
Pulses per revolution	1024 (HTL-P)
Further pulses per revolution	Pulse numbers parameterized ex works
Phase shift	Typ. 90 °
Duty cycle	Typ. 50 %
Reference signal	Zero pulse, width 90° or 180°
Sensing method	Optical
Output frequency typ.	≤200 kHz
Output signals	K1, K2, K0 + inverted
Output stages	HTL-P (power linedriver)
Shaft insulation	Suitable up to 3.5 kV (DC)
Transmission length	≤350 m at 100 kHz (HTL-P)
Interference immunity	EN 61000-6-2
Emitted interference	EN 61000-6-4
Approval	CE UL approval / E217823 CSA

Technical data - mechanical design

Size (flange)	ø105 mm, length 94 mm
Shaft type	ø16G7 mm (blind hollow shaft)
Admitted shaft load	≤350 N axial ≤450 N radial
Mounting type	Hollow shaft: central screw
Protection EN 60529	IP 66 / IP 67
Operating speed	≤6000 rpm (mechanical)
Starting torque	≤136 Ncm
Rotor moment of inertia	270 gcm²
Material	Housing: aluminium, powder-coated Shaft: stainless steel
Operating temperature	-40...+100 °C
Resistance	IEC 60068-2-6 Vibration 20 g, 10-2000 Hz IEC 60068-2-27 Shock 300 g, 1 ms 1 Mio. brake shocks
Corrosion protection	IEC 60068-2-52 Salt mist for ambient conditions CX according to ISO 12944-2
Connection	Cable, open cable end, length 1 m

Optional

- ATEX

Possible combinations

- Redundant sensing with second output (HOG1070)
- Speed monitoring (HOG1090)
- Centrifugal switch FSL (HOG1095)

The product features and technical data specified do not express or imply any warranty. Technical modifications subject to change.
2026-05-04

EHOG1060-E16100012/10

High-performant incremental HeavyDuty encoders for demanding machinery and asynchronous drives

Article number: 11736715

Terminal assignment

FIX

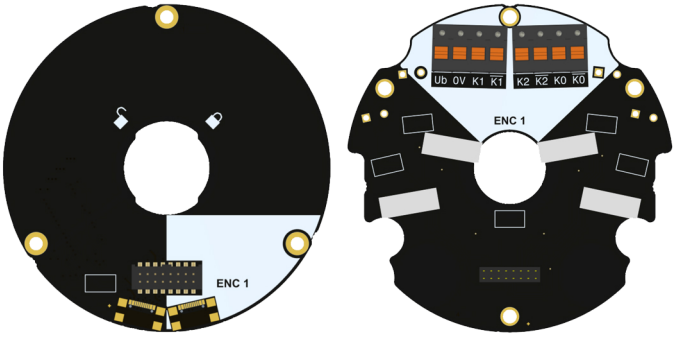

Cable

Wire color	Assignment
Red	Ub
Blue	0 V
Grey	K0
Pink	$\overline{K0}$
White	K1
Brown	$\overline{K1}$
Green	K2
Yellow	$\overline{K2}$

Terminal significance

U_b	Voltage supply
0V	Ground
K0	Zero pulse (reference signal)
$\overline{K0}$	Zero pulse inverted
K1	Output signal channel 1
$\overline{K1}$	Output signal channel 1 inverted
K2	Output signal channel 2
$\overline{K2}$	Output signal channel 2 inverted

USB ENC1	USB-C for parameterization (SMART)

Output signals

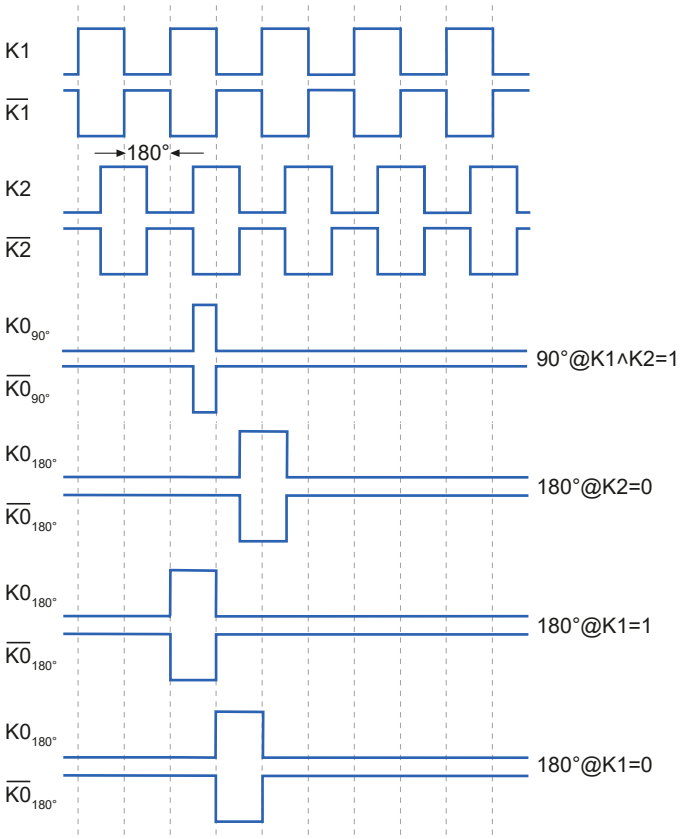

With positive direction of rotation / clockwise, with view on the encoder shaft



The product features and technical data specified do not express or imply any warranty. Technical modifications subject to change.

2026-05-04

EHOG1060-E16100012/10

High-performant incremental HeavyDuty encoders for demanding machinery and asynchronous drives

Article number: 11736715

Derating

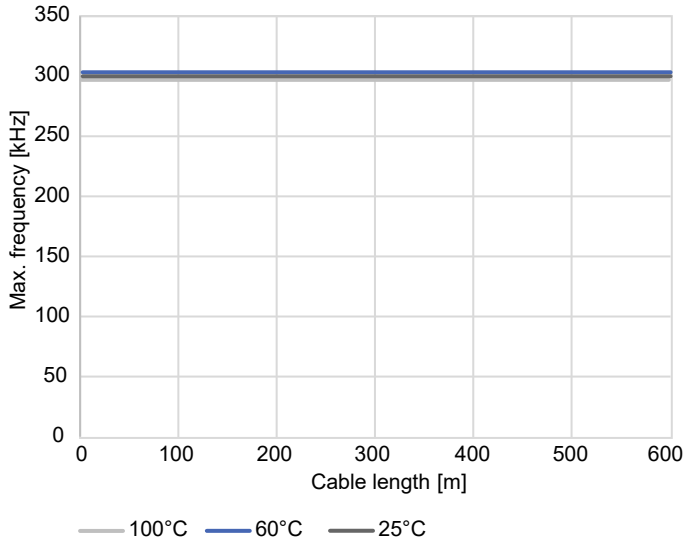

Max. frequency over cable length and temperature, Ub 24 V

Dimensions

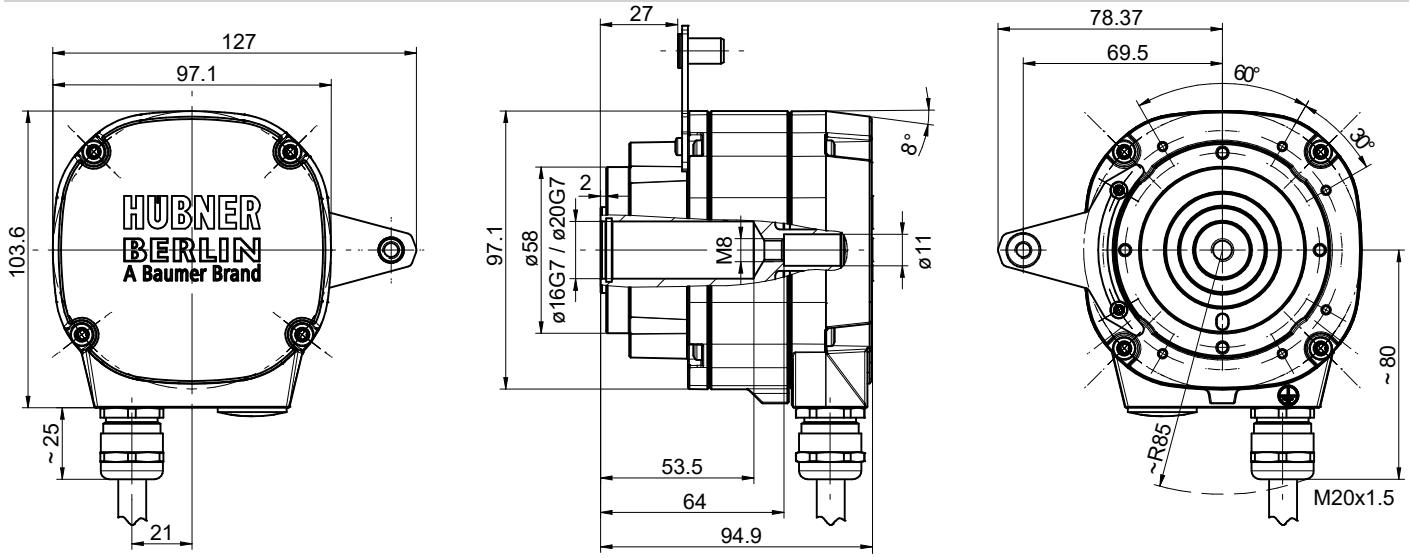

Blind hollow shaft, cable (torque plate can be mounted at different positions)

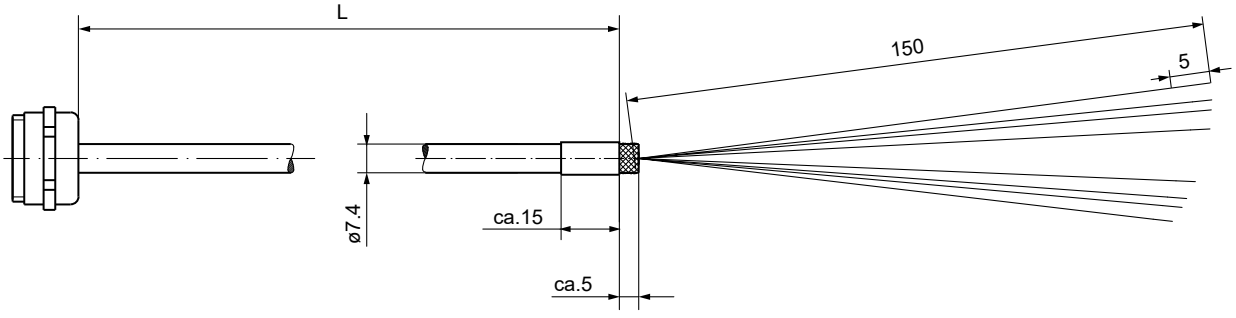

Cable data

2026-05-04 The product features and technical data specified do not express or imply any warranty. Technical modifications subject to change.

EHOG1060-E16100012/10

High-performant incremental HeavyDuty encoders for demanding machinery and asynchronous drives

Article number: 11736715

Ordering reference

Product	Shaft	Pulses per revolution, output	Connection	Comment	Material number
HOG1060	Solid shaft ø11 mm	1024, HTL-P	1 x cable gland M20	FIX	EHOG1060-11731268
			1 x cable gland M25	FIX	EHOG1060-11731269
		2048, HTL-P	1 x cable gland M20	FIX	EHOG1060-11731270
			1 x cable gland M25	FIX	EHOG1060-11731271
		Parameterization at factory[1)]	1 x cable gland M20	FIX	EHOG1060-11731272
			1 x cable gland M25	FIX	EHOG1060-11731273
		Parameterization & monitoring at customer	1 x cable gland M20	SMART	EHOG1060-11731274
			1 x cable gland M25	SMART	EHOG1060-11731275
	Blind hollow shaft ø16G7 mm	1024, HTL-P	1 x cable gland M20	FIX	EHOG1060-11731276
			1 x cable 1 m	FIX	EHOG1060-11736715
		2048, HTL-P	1 x cable gland M20	FIX	EHOG1060-11731277
		Parameterization at factory[1)]	1 x cable gland M20	FIX	EHOG1060-11731278
		Parameterization & monitoring at customer	1 x cable gland M20	SMART	EHOG1060-11731279
	Blind hollow shaft ø20G7 mm	1024, HTL-P	1 x cable gland M20	FIX	EHOG1060-11731280
		2048, HTL-P	1 x cable gland M20	FIX	EHOG1060-11731281
		Parameterization at factory[1)]	1 x cable gland M20	FIX	EHOG1060-11731282
		Parameterization & monitoring at customer	1 x cable gland M20	SMART	EHOG1060-11731283
	Cone shaft ø17 mm	1024, HTL-P	1 x cable gland M20	FIX	EHOG1060-11731284
		2048, HTL-P	1 x cable gland M20	FIX	EHOG1060-11731285
		Parameterization at factory[1)]	1 x cable gland M20	FIX	EHOG1060-11731286
		Parameterization & monitoring at customer	1 x cable gland M20	SMART	EHOG1060-11731287

1) Please choose resolution, output stage and zero pulse (length and position) with your order
Resolution: 1...32768 ppr
Output stage: HTL-P or TTL
Zero pulse:
- 90°, K1=K2=1
- 180°, K1=0
- 180°, K2=0
- 180°, K1=1

Example for EHOG1060 - 11731272: 5000 ppr, TTL, 180°, K2=0

2026-05-04 The product features and technical data specified do not express or imply any warranty. Technical modifications subject to change.