Incremental encoder

EHOG870-E12P2P222/50

Article number: 11738879

Overview

- Redundant incremental HeavyDuty encoders for demanding machinery and asynchronous drives
- Protection IP66
- Shaft insulation 3.5 kV
- Corrosion protection CX
- Operating temperature -40...+100 °C
- Cable length up to 350 m (HTL-P) or 550 m (TTL)
- Sealed and user-friendly field termination
- Extended protection circuit
- Parameterization, including different resolutions
- Status monitoring and display with Baumer Sensor Suite
- Connection: cable 5 m
- Blind hollow shaft ø12 mm
- Pulses per revolution 2048



Picture similar

HUBNER BERLIN A Baumer Brand | LongLife | HeavyDuty 70 years of experience | 1+1=1 Combination

Technical data

Technical data - electrical ratings	
Voltage supply	4.75...30 VDC (Vin = Vout, HTL/TTL)
Consumption w/o load	≤100 mA
Pulses per revolution	2048
Further pulses per revolution	Freely parameterizable with Baumer Sensor Suite
Phase shift	Typ. 90 °
Duty cycle	Typ. 50 %
Reference signal	Zero pulse, width 90° or 180°
Sensing method	Optical
Output frequency typ.	≤200 kHz
Output signals	K1, K2, K0 + inverted
Output stages	HTL-P (power linedriver) TTL
Shaft insulation	Suitable up to 3.5 kV (DC)
Transmission length	≤350 m at 100 kHz (HTL-P) ≤550 m at 100 kHz (TTL)
Interference immunity	EN 61000-6-2
Emitted interference	EN 61000-6-4
Approval	CE UL approval / E217823 CSA

Technical data - mechanical design	
Size (flange)	ø90 mm, length 72 mm
Shaft type	ø12G7 mm (blind hollow shaft)
Admitted shaft load	≤350 N axial ≤450 N radial
Mounting type	Hollow shaft: central screw
Protection EN 60529	IP 66
Operating speed	≤6000 rpm (mechanical)
Starting torque	≤82 Ncm
Rotor moment of inertia	220 gcm²
Material	Housing: aluminium, powder-coated Shaft: stainless steel
Operating temperature	-40...+100 °C
Resistance	IEC 60068-2-6 Vibration 20 g, 10-2000 Hz IEC 60068-2-27 Shock 300 g, 1 ms 1 Mio. brake shocks
Corrosion protection	IEC 60068-2-52 Salt mist for ambient conditions CX according to ISO 12944-2
Connection	Cable, open cable end, length 5 m

2026-08-06 The product features and technical data specified do not express or imply any warranty. Technical modifications subject to change.

EHOG870-E12P2P222/50

Article number: 11738879

Baumer Sensor Suite

Monitoring

The following information is displayed with the Baumer Sensor Suite:

- Encoder settings
- Speed and position over time
- Current speed, position and temperature
- Encoder status
- Minimum and maximum temperature over entire service life
- Total operating time
- Total revolutions

Parameterization

The following parameters can be set via USB-C access with the Baumer Sensor Suite:

- Number of lines per mechanical revolution
- Output stages
- Reference length and phase

Parameterization - encoder

Pulses per revolution	Selection: 50, 500, 512, 1000, 1024, 2048, 2500, 4096, 5000 + free input
Output stages	HTL-P (power linedriver) TTL
Rotating direction	CW, CCW
Width of zero pulse	90°, 180° (reference signal)

Terminal assignment

Cable

Wire color	Assignment
Red	Ub
Blue	0 V
Grey	K0
Pink	$\overline{K0}$
White	K1
Brown	$\overline{K1}$
Green	K2
Yellow	$\overline{K2}$
Red	U2
Blue	02
Grey	KR
Pink	$\overline{KR}$
White	KA
Brown	$\overline{KA}$
Green	KB
Yellow	$\overline{KB}$

Terminal significance

U_b	Voltage supply - encoder 1
0V	Ground - encoder 1
K0	Zero pulse (reference signal) - encoder 1
$\overline{K0}$	Zero pulse inverted - encoder 1
K1	Output signal channel 1 - encoder 1
$\overline{K1}$	Output signal channel 1 inverted - encoder 1
K2	Output signal channel 2 - encoder 1
$\overline{K2}$	Output signal channel 2 inverted - encoder 1
U2	Voltage supply - encoder 2
02	Ground - encoder 2
KR	Zero pulse (reference signal) - encoder 2
$\overline{KR}$	Zero pulse inverted - encoder 2
KA	Output signal channel 1 - encoder 2
$\overline{KA}$	Output signal channel 1 inverted - encoder 2
KB	Output signal channel 2 - encoder 2
$\overline{KB}$	Output signal channel 2 inverted - encoder 2
USB ENC1	USB-C for parameterization - encoder 1 (SMART)
USB ENC2	USB-C for parameterization - encoder 2 (SMART)

2026-08-06 The product features and technical data specified do not express or imply any warranty. Technical modifications subject to change.

EHOG870-E12P2P222/50

Article number: 11738879

Output signals

Encoder 1

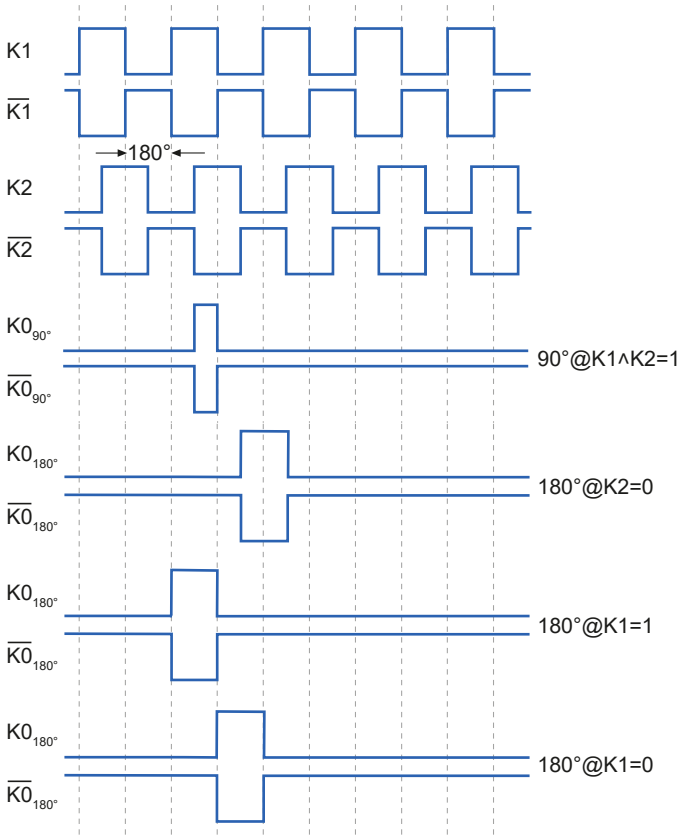

With positive direction of rotation / clockwise, with view on the encoder shaft



Output signals

Encoder 2

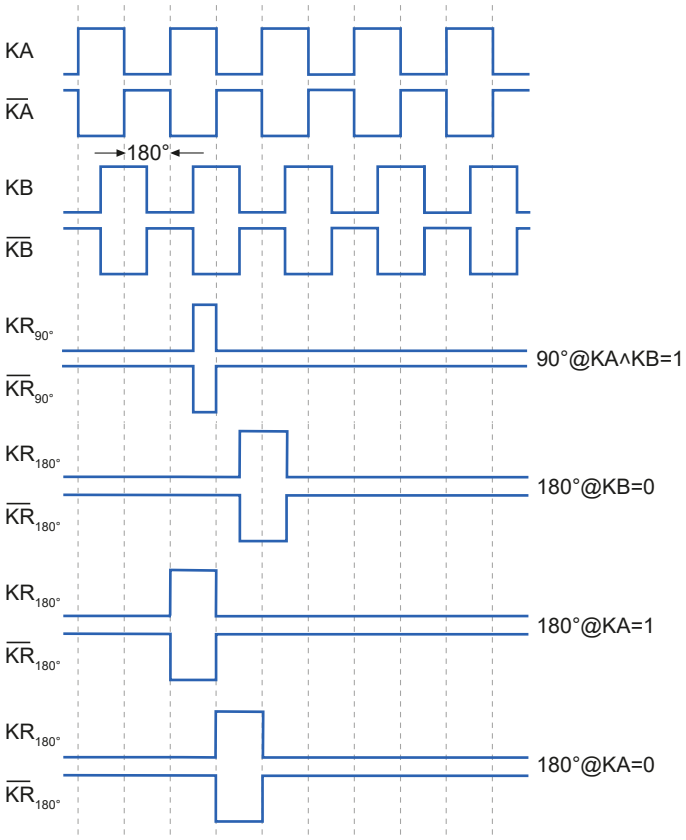

With positive direction of rotation / clockwise, with view on the encoder shaft



2026-08-06 The product features and technical data specified do not express or imply any warranty. Technical modifications subject to change.

EHOG870-E12P2P222/50

Article number: 11738879

Derating

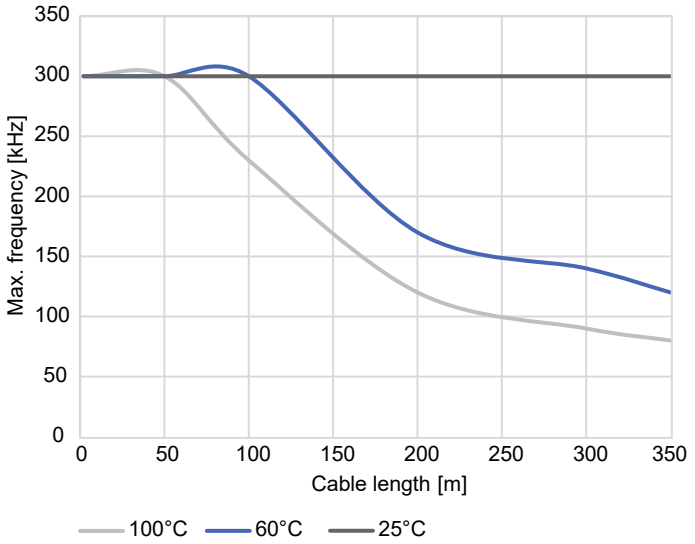

Max. frequency over cable length and temperature, Ub 24 V

Dimensions

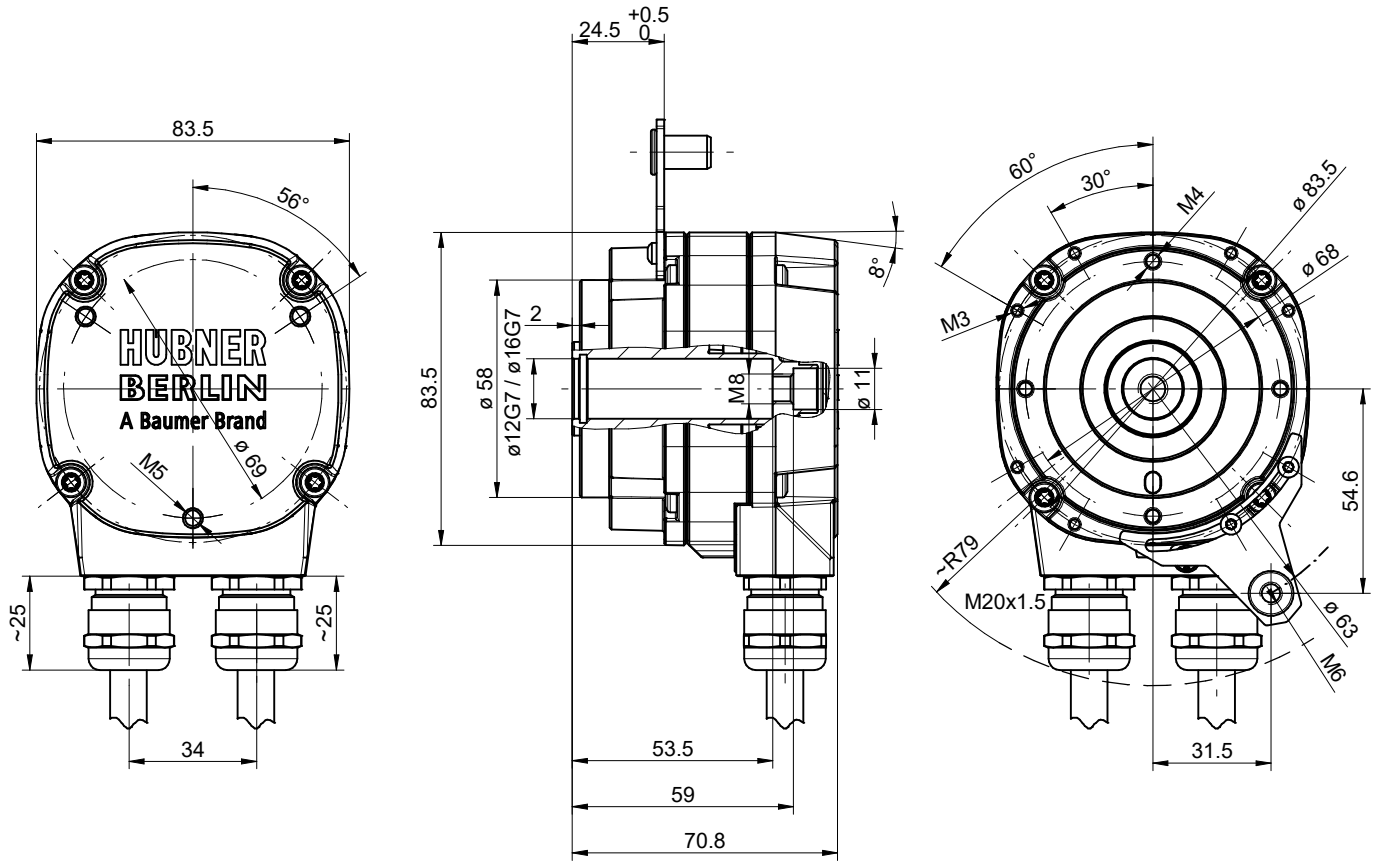

Blind hollow shaft, 2x cable (torque plate can be mounted at different positions)

2026-08-06 The product features and technical data specified do not express or imply any warranty. Technical modifications subject to change.

EHOG870-E12P2P222/50

Article number: 11738879

Dimensions

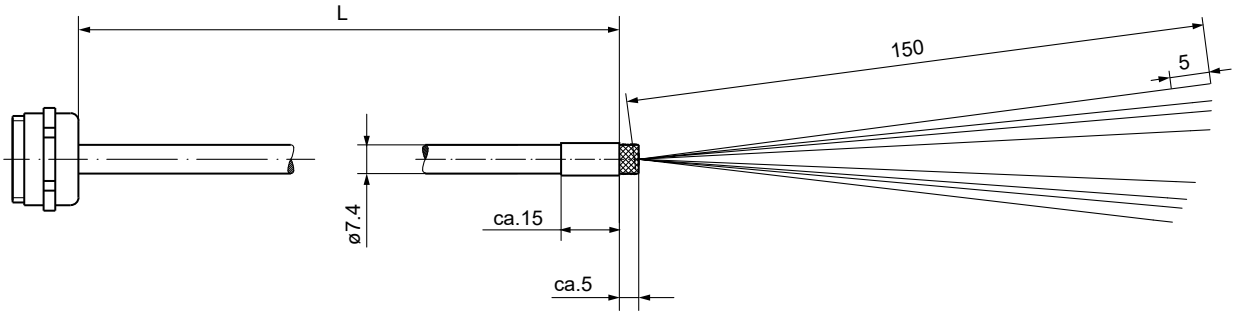

Cable data

2026-08-06 The product features and technical data specified do not express or imply any warranty. Technical modifications subject to change.

EHOG870-E12P2P222/50

Article number: 11738879

Ordering reference

Product	Shaft	Pulses per revolution, output	Connection	Comment	Material number
HOG870	Solid shaft ø11 mm	Parameterization at factory[1)]	2 x cable gland M20	Redundant – FIX	EHOG870-11730703
		Parameterization & monitoring at customer	2 x cable gland M20	Redundant – SMART	EHOG870-11730705
	Blind hollow shaft ø12G7 mm	1024, HTL-P	1 x cable 5 m	Redundant – FIX	EHOG870-11738878
		2048, HTL-P	1 x cable 5 m	Redundant – FIX	EHOG870-11738879
		4096, HTL-P	1 x cable 5 m	Redundant – FIX	EHOG870-11738880
		Parameterization at factory[1)]	2 x cable gland M20	Redundant – FIX	EHOG870-11730706
		Parameterization & monitoring at customer	2 x cable gland M20	Redundant – SMART	EHOG870-11730707
	Blind hollow shaft ø16G7 mm	Parameterization at factory[1)]	2 x cable gland M20	Redundant – FIX	EHOG870-11730709
		Parameterization & monitoring at customer	2 x cable gland M20	Redundant – SMART	EHOG870-11730710

1) Please choose 2x resolution, output stage and zero pulse (length and position) with your order
Resolution: 1...32768 ppr
Output stage: HTL-P or TTL
Zero pulse:
- 90°, K1=K2=1
- 180°, K1=0
- 180°, K2=0
- 180°, K1=1

Example for EHOG870-11730703: Encoder 1: 5000 ppr, TTL, 180°, K2=0 / Encoder 2: 1024 ppr, HTL-P, 90°, K1=K2=1

2026-08-06 The product features and technical data specified do not express or imply any warranty. Technical modifications subject to change.