Baumer
Passion for Sensors

Incremental encoder

EN780.IL-B12H200B4

Article number: 11738380

Overview

- Encoder for asynchronous motors, tower cranes, mobile cranes, converting and processing machines
- Built-in insulation against shaft currents up to 2.8 kV
- Output stages for cable length up to 350 m (HTL-P)
- Extended electronic protection circuit
- Corrosion resistance C4
- Protection IP66
- Operating temperature -30...+85 °C
- Blind hollow shaft ø12 mm
- Pulses per revolution 2048



LongLife

Fully Reinforced Encoders

Technical data

Technical data - electrical ratings

Voltage supply	4.75...30 VDC (Vin = Vout, HTL/TTL)
Consumption w/o load	≤100 mA
Pulses per revolution	2048
Phase shift	Typ. 90 °
Duty cycle	Typ. 50 %
Reference signal	Zero pulse, width 90° or 180°
Sensing method	Optical
Output frequency typ.	≤200 kHz
Output signals	K1, K2, K0 + inverted
Output stages	HTL-P (power linedriver)
Shaft insulation	Suitable up to 2.8 kV
Transmission length	≤350 m at 100 kHz (HTL-P)
Interference immunity	EN 61000-6-2
Emitted interference	EN 61000-6-4
Approval	CE UL approval / E217823 CSA

Technical data - mechanical design

Size (flange)	ø84 mm, length 55 mm

Technical data - mechanical design

Shaft type	ø12G7 mm (blind hollow shaft)
Admitted shaft load	≤350 N axial ≤450 N radial
Mounting type	Hollow shaft: clamping ring
Protection EN 60529	IP 66
Operating speed	≤6000 rpm (mechanical)
Starting torque	≤6 Ncm
Rotor moment of inertia	265 gcm²
Material	Housing: aluminium, powder-coated Shaft: stainless steel
Operating temperature	-30...+85 °C
Resistance	IEC 60068-2-6 Vibration 20 g, 10-2000 Hz IEC 60068-2-27 Shock 300 g, 6 ms 1 Mio. brake shocks
Corrosion protection	IEC 60068-2-52 Salt mist for ambient conditions C4 according to ISO 12944-2
Connection	Flange connector M23, 12-pin

Optional

- Cable gland M20 with 1 m, 2 m, 3 m, 5 m, 10 m cable length or connector

2026-08-17 The product features and technical data specified do not express or imply any warranty. Technical modifications subject to change.

EN780.IL-B12H200B4

Article number: 11738380

Terminal assignment

Flange connector M23, 12-pin, male

Pin	Assignment
1	$\overline{K2}$
2	dnu
3	K0
4	$\overline{K0}$
5	K1
6	$\overline{K1}$
7	dnu
8	K2
9	dnu
10	0 V
11	dnu
12	Ub

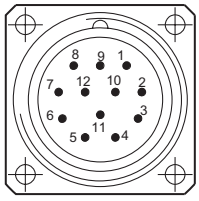

Flange connector M23
(male, 12-pin), CW

Output signals

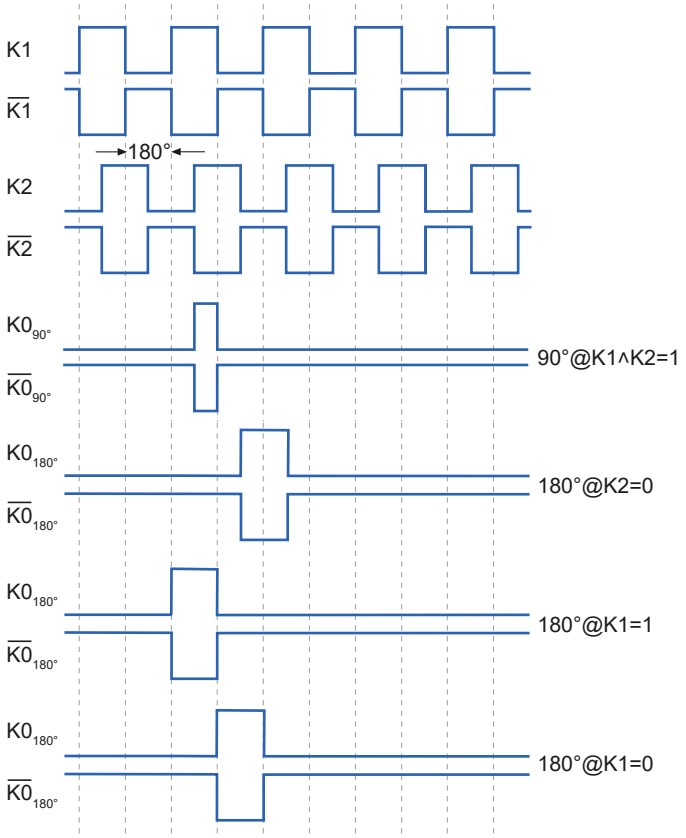

Output signals

With positive direction of rotation / clockwise, with view on the encoder shaft



Derating

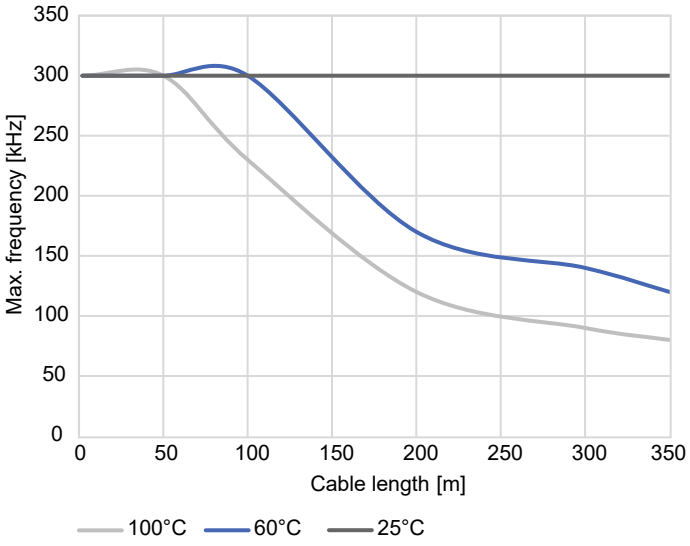

Max. frequency over cable length and temperature, Ub 24 V

2026-08-17 The product features and technical data specified do not express or imply any warranty. Technical modifications subject to change.

Incremental encoder

EN780.IL-B12H200B4

Article number: 11738380

Dimensions

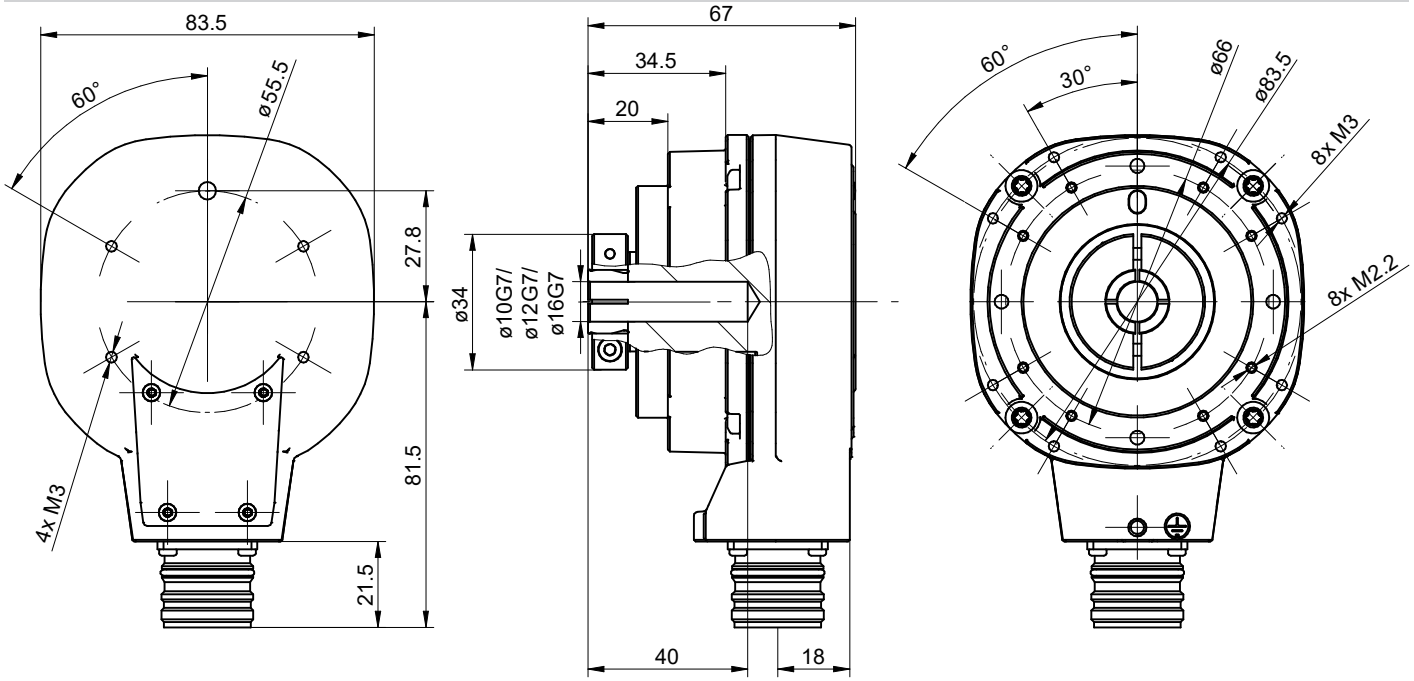

2026-08-17 The product features and technical data specified do not express or imply any warranty. Technical modifications subject to change.

EN780.IL-B12H200B4

Article number: 11738380

Ordering reference

Product	Shaft	Pulses per revolution, output	Connection	Comment	Material number
EN780.IL	Blind hollow shaft ø10G7 mm	1024, HTL-P	1 x flange connector M23	FIX	EN780.IL-B10H100B4
		2048, HTL-P	1 x flange connector M23	FIX	EN780.IL-B10H200B4
		Parameterization at factory[1)]	1 x flange connector M23	FIX	EN780.IL-B10PF00B4
	Blind hollow shaft ø12G7 mm	1024, HTL-P	1 x flange connector M23	FIX	EN780.IL-B12H100B4
		2048, HTL-P	1 x flange connector M23	FIX	EN780.IL-B12H200B4
		Parameterization at factory[1)]	1 x flange connector M23	FIX	EN780.IL-B12PF00B4
	Blind hollow shaft ø16G7 mm	1024, HTL-P	1 x flange connector M23	FIX	EN780.IL-B16H100B4
		2048, HTL-P	1 x flange connector M23	FIX	EN780.IL-B16H200B4
		Parameterization at factory[1)]	1 x flange connector M23	FIX	EN780.IL-B16PF00B4
	Through hollow shaft ø20G7 mm	1024, HTL-P	1 x flange connector M23	FIX	EN780.IL-T20H100B4
		2048, HTL-P	1 x flange connector M23	FIX	EN780.IL-T20H200B4
		Parameterization at factory[1)]	1 x flange connector M23	FIX	EN780.IL-T20PF00B4
	Through hollow shaft ø25G7 mm	1024, HTL-P	1 x flange connector M23	FIX	EN780.IL-T25H100B4
		2048, HTL-P	1 x flange connector M23	FIX	EN780.IL-T25H200B4
		Parameterization at factory[1)]	1 x flange connector M23	FIX	EN780.IL-T25PF00B4

1) Please choose resolution, output stage and zero pulse (length and position) with your order
Resolution: 1...32768 ppr
Output stage: HTL-P or TTL
Zero pulse:
- 90°, K1=K2=1
- 180°, K1=0
- 180°, K2=0
- 180°, K1=1

Example for EN780.IL-B10PF00B4: 5000 ppr, TTL, 180°, K2=0

Accessories

Mounting accessories

11739347	Torque support R51 mm
11739350	Torque support R62..R124.5 mm
11739349	Torque support R68...R78 mm
11739354	Torque support L80…125 mm
11740139	Dust protection cap HS35/EN780

2026-08-17 The product features and technical data specified do not express or imply any warranty. Technical modifications subject to change.