Baumer
Passion for Sensors

Incremental encoder

EN780P.IL-T20P11PB4

Article number: 11738398

Overview

- SMART encoder for asynchronous motors, tower cranes, mobile cranes, converting and processing machines
- Built-in insulation against shaft currents up to 2.8 kV
- Output stages for cable length up to 350 m (HTL-P)
- Extended electronic protection circuit
- Corrosion resistance C4
- Protection IP66
- Operating temperature -30...+85 °C
- Through hollow shaft ø20 mm
- Status monitoring with LED
- Parameterization of the resolution, output stages and zero pulse position with Baumer Sensor Suite via USB-C
- 1 x digital switch output (push)



LongLife

Fully Reinforced Encoders

Technical data

Technical data - electrical ratings	
Voltage supply	4.75...30 VDC (Vin = Vout, HTL/TTL)
Consumption w/o load	≤100 mA
Pulses per revolution	1 … 32768
Further pulses per revolution	Freely parameterizable with Baumer Sensor Suite
Phase shift	Typ. 90 °
Duty cycle	Typ. 50 %
Reference signal	Zero pulse, width 90° or 180°
Sensing method	Optical
Output frequency typ.	≤200 kHz
Output signals	K1, K2, K0 + inverted
Output stages	HTL-P (power linedriver) TTL
Shaft insulation	Suitable up to 2.8 kV
Transmission length	≤350 m at 100 kHz (HTL-P)
Interference immunity	EN 61000-6-2
Emitted interference	EN 61000-6-4
Approval	CE UL approval / E217823 CSA
Technical data - mechanical design	
Size (flange)	ø84 mm, length 55 mm
Shaft type	ø20G7 mm (through hollow shaft)
Admitted shaft load	≤350 N axial ≤450 N radial
Mounting type	Hollow shaft: clamping ring
Protection EN 60529	IP 66
Operating speed	≤6000 rpm (mechanical)
Starting torque	≤6 Ncm
Rotor moment of inertia	401 gcm²

Technical data - mechanical design	
Material	Housing: aluminium, powder-coated Shaft: stainless steel
Operating temperature	-30...+85 °C
Resistance	IEC 60068-2-6 Vibration 20 g, 10-2000 Hz IEC 60068-2-27 Shock 300 g, 6 ms 1 Mio. brake shocks
Corrosion protection	IEC 60068-2-52 Salt mist for ambient conditions C4 according to ISO 12944-2
Connection	Flange connector M23, 12-pin
Technical data - digital switches	
Function	Combination with one digital switch: • Overspeed and underspeed detection • Standstill and creep monitoring • Direction of rotation display • Warning or failure events • Parameterizable with Baumer Sensor Suite
Switching outputs	Output (Push)
Number of switching outputs	1
Technical data - digital speed switches	
Function	Detection of overspeed and underspeed
Max. number of switching outputs	1
Parametrization	Speed range Hysteresis Switching delay
Speed setting resolution	0.1 rpm
Switching accuracy	± 2 % (±1 rpm at 50 rpm)

The product features and technical data specified do not express or imply any warranty. Technical modifications subject to change.
2026-09-01

EN780P.IL-T20P11PB4

Article number: 11738398

Technical data

Technical data - standstill monitoring

Function	Detection of standstill and creep
Max. number of switching outputs	1
Parametrization	Dwell time Standstill position window
Activation Speed	±2 rpm

Technical data - direction of rotation

Function	Detection and display of the direction of rotation
Max. number of switching outputs	1
Parametrization	Hysteresis

Optional

- Cable gland M20 with 1 m, 2 m, 3 m, 5 m, 10 m cable length or connector

2026-09-01 The product features and technical data specified do not express or imply any warranty. Technical modifications subject to change.

EN780P.IL-T20P11PB4

Article number: 11738398

Baumer Sensor Suite

Monitoring

The following information is displayed with the Baumer Sensor Suite:

- Encoder settings
- Speed and position over time
- Current speed, position and temperature
- Encoder status
- Minimum and maximum temperature over entire service life
- Total operating time
- Total revolutions
- Switch monitoring
  - Switch status
  - Speed over time per switch with switching window
  - Switch status over time
  - Direction of rotation status
  - Status of standstill monitoring

Parameterization

The following parameters can be set via USB-C access with the Baumer Sensor Suite:

- Number of lines per mechanical revolution
- Output stages
- Reference length and phase
- Setting the user units
- Switching outputs
  - Switching active high, active low
  - Speed switch
  - Direction of rotation switch
  - Standstill switch
- Time behavior for switching outputs
  - Minimum switch-on time (On)
  - Minimum switch-off duration (Off)

Parameterization - encoder

Pulses per revolution	Selection: 50, 500, 512, 1000, 1024, 2048, 2500, 4096, 5000 + free input
Output stages	HTL-P (power linedriver) TTL
Rotating direction	CW, CCW
Width of zero pulse	90°, 180° (reference signal)

Parameterization - digital switches

Min. switch-on time	1...1000 ms
Min. switch-off time	1...1000 ms

Baumer Sensor Suite

Parameterization - digital speed switch

Function	Speed switch with adjustable speed limits and switching delay to filter out short-term speed peaks
Switching output	Active high / active low
Upper/lower speed range	±2 … 6000 rpm
Hysteresis	0...50 %
Switching delay time	0...5000 ms (0 ms default)

Parameterization - standstill monitoring

Function	Reliable creep detection through position monitoring if the speed falls below a specified speed within a defined time window
Dwell time	10...1000000 ms
Creep Window	1...100°

Parameterization - direction of rotation

Function	Direction detection with adjustable hysteresis
Switching output	Active high / active low
Hysteresis	1...100°

The product features and technical data specified do not express or imply any warranty. Technical modifications subject to change.
2026-09-01

EN780P.IL-T20P11PB4

Article number: 11738398

Terminal assignment

Flange connector M23, 12-pin, male

Pin	Assignment
1	$\overline{K2}$
2	Ground - switch output (push)
3	K0
4	$\overline{K0}$
5	K1
6	$\overline{K1}$
7	Switch output (push)
8	K2
9	dnu
10	0 V
11	dnu
12	Ub

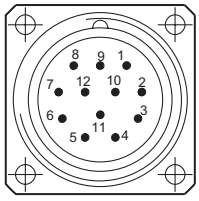

Flange connector M23
(male, 12-pin), CW

Output signals

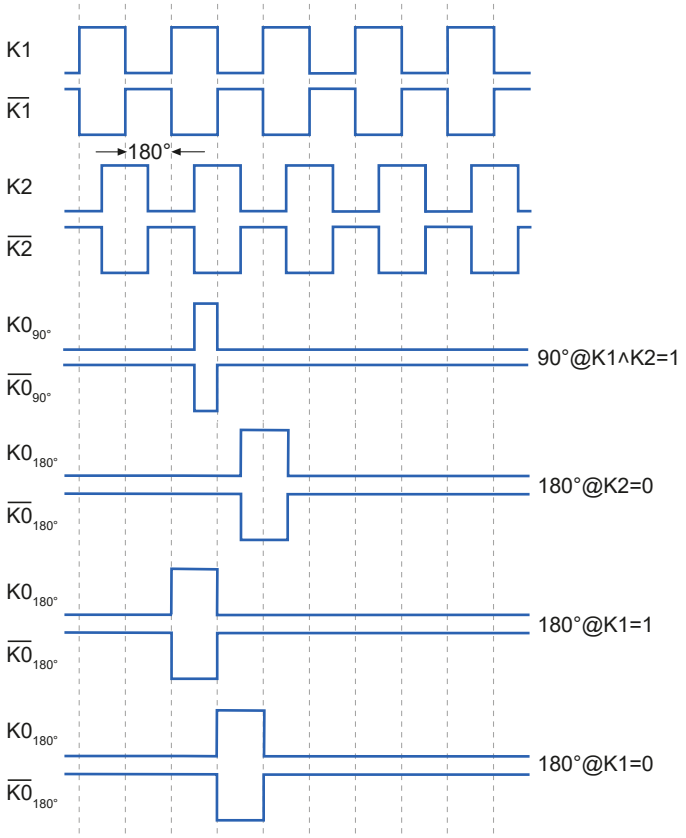

Output signals

With positive direction of rotation / clockwise, with view on the encoder shaft



Derating

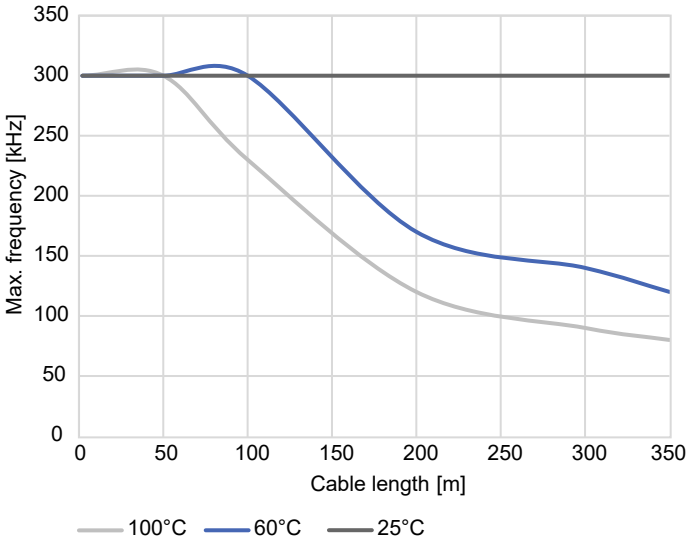

Max. frequency over cable length and temperature, Ub 24 V

2026-09-01 The product features and technical data specified do not express or imply any warranty. Technical modifications subject to change.

Incremental encoder

EN780P.IL-T20P11PB4

Article number: 11738398

Dimensions

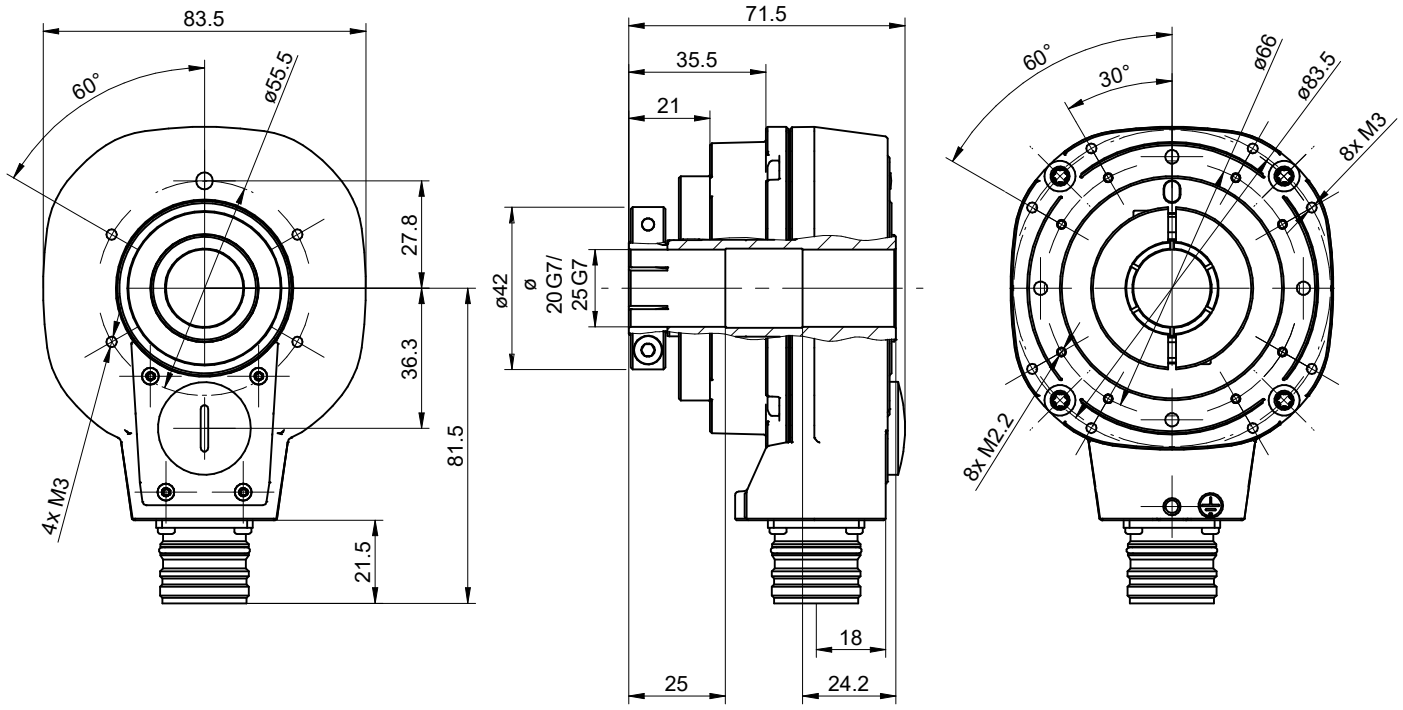

2026-09-01 The product features and technical data specified do not express or imply any warranty. Technical modifications subject to change.

EN780P.IL-T20P11PB4

Article number: 11738398

Ordering reference

Product	Shaft	Pulses per revolution, output	Connection	Comment	Material number
EN780P.IL	Blind hollow shaft ø10G7 mm	Parameterization & monitoring at customer	1 x flange connector M23	SMART	EN780P.IL-B10P100B4
		Parameterization & monitoring at customer	1 x flange connector M23	1 x Push	EN780P.IL-B10P11PB4
	Blind hollow shaft ø12G7 mm	Parameterization & monitoring at customer	1 x flange connector M23	SMART	EN780P.IL-B12P100B4
		Parameterization & monitoring at customer	1 x flange connector M23	1 x Push	EN780P.IL-B12P11PB4
	Blind hollow shaft ø16G7 mm	Parameterization & monitoring at customer	1 x flange connector M23	SMART	EN780P.IL-B16P100B4
		Parameterization & monitoring at customer	1 x flange connector M23	1 x Push	EN780P.IL-B16P11PB4
	Through hollow shaft ø20G7 mm	Parameterization & monitoring at customer	1 x flange connector M23	SMART	EN780P.IL-T20P100B4
		Parameterization & monitoring at customer	1 x flange connector M23	1 x Push	EN780P.IL-T20P11PB4
	Through hollow shaft ø25G7 mm	Parameterization & monitoring at customer	1 x flange connector M23	SMART	EN780P.IL-T25P100B4
		Parameterization & monitoring at customer	1 x flange connector M23	1 x Push	EN780P.IL-T25P11PB4

Accessories

Mounting accessories

11739347	Torque support R51 mm
11739350	Torque support R62..R124.5 mm
11739349	Torque support R68...R78 mm
11739354	Torque support L80…125 mm
11740139	Dust protection cap HS35/EN780

2026-09-01 The product features and technical data specified do not express or imply any warranty. Technical modifications subject to change.