Baumer
Passion for Sensors

Supply cable

ESG 34CP0200G

Article Number: 11229672

Overview

- M12, female, A-coded; 5-poles; PUR, 200 cm, shielded, free cable end
- Dragchain capable
- Head A: IP65, IP66K, IP67
- Cable: Good resistance against chemicals, flames and oils
- Halogen free

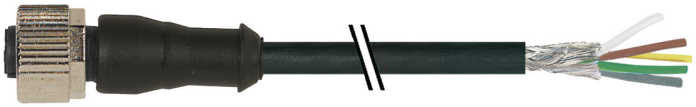

CE

cULus LISTED
CYJV Cable Assembly
47YV
E315836

Technical data

Side A	
Head A: Connection	M12
Head A: Angle cable outlet	0°
Head A: Gender	Female
Head A: Coding	A
Head A: No. of poles	5
Head A: LED	No
Head A: Width across flats	AF13
Head A: Tightening torque	1.0 Nm
Head A: Knurled nut material	Zinc-pressure die casting, surface Ni
Head A: Body color	Black
Head A: Gasket material	FKM
Labeling sleeve side A	Yes
Head A: Contact layout pin 1	WH
Head A: Contact layout pin 2	BN
Head A: Contact layout pin 3	GN
Head A: Contact layout pin 4	YE
Head A: Contact layout pin 5	GY
Side B	
Head B: Connection	Open-ended wires
Labeling sleeve side B	No
Cables	
Cable length	200 cm
Length tolerance	+ 10 cm
Stripping length	20 mm
Shielded	Yes
Conductor structure	42 × 0.1 mm
AWG	22
External sheath: Material	PUR
External sheath: Color	Black
Cable diameter	5.6 mm ± 5%
Wire cross section	0.34 mm²
Cable: Halogen free	Yes

Cable	
External sheath: Shore hardness	90 ± 5 A
Cable: Temperature range (mobile)	- 25 ...+ 80 °C
Cable: Temperature range (fixed)	- 40 ...+ 80 °C
Operating voltage (only UL listed)	30 V AC/DC
Shielded	Yes
Shielding: Covering	approx. 80 %
Shielding attenuation	0
Bending radius (fixed)	28 mm
Number of wires	5
Number and diameter of wires	5x0.34
Length tolerance	+ 10 cm
Cable length	200 cm
Acceleration (C-track)	max. 5 m/s²
AWG	22
Bending radius (fixed)	min. 5 × outer diameter
Torsion speed	max. 35 cycles/min
Bending radius (mobile)	min. 10 × outer diameter
Cable weight	approx. 57.2 g/m
Conductor structure	42 × 0.1 mm
Cable diameter	5.6 mm ± 5%
Conductor: Material	Copper, bare
External sheath: Material	PUR
Insulation: Material	PP
Shielding: Material	Copper, tinned
No. of bending cycles (C-track)	approx. 5000000 Cycles
Nominal voltage	300 V
No. of torsion cycles	approx. 2000000 Cycles
Paired stranding	No
Single wire diameter	0.16 mm
Cable: Test voltage	2 kV 0
Torsion stress in °	± 30 °/m
Total stranding	5 wires twisted around central filler
Travel speed (C-track)	max. 3.3 m/s
Traversing path (horizontal)	max. 5 m

2025-07-29 The product features and technical data specified do not express or imply any warranty. Technical modifications subject to change.

Supply cable

ESG 34CP0200G

Article Number: 11229672

Technical data

Cable	
Wire cross section	0.34 mm²
Wire processing	No
Wire diameter incl. isolation	1.25 mm ± 5%
External sheath: Color	Black
Electrical data	
Operating voltage	max. 60 V AC/DC 0
Operating voltage (only UL listed)	30 V AC/DC
Nominal voltage	300 V
Contact resistance	max. 30 mOhm
Operating current per contact	max. 4 A
Mechanical data	
Head A: Degree of protection	IP65, IP66K, IP67
Bending radius (mobile)	min. 10 × outer diameter
Bending radius (fixed)	min. 5 × outer diameter
No. of bending cycles (C-track)	approx. 5000000 Cycles
Torsion speed	max. 35 cycles/min
Torsion stress in °	± 30 °/m
No. of torsion cycles	approx. 2000000 Cycles
Acceleration (C-track)	max. 5 m/s²
Travel speed (C-track)	max. 3.3 m/s

Environmental conditions	
Temperature range (mobile)	- 25 ...+ 80 °C
Temperature range (fixed)	- 25 ...+ 85 °C
Cable: Temperature range (fixed)	- 40 ...+ 80 °C
Dragchain capable	Yes
Head A: Chemical resistance	No
Head A: Flame resistance	HB (UL 94)
Head A: Oil resistance	ASTM 1 oil, mineral oils, limited to hydraulic oils
Head A: Acid and alkali resistant	No
Head A: Pollution degree	3
Cable: Chemical resistance	Good (DIN EN 60811-404)
Cable: Flame resistance	Conform UL 1581 §1090 (H), CSA FT2, IEC 60332-2-2
Cable: Oil resistance	Good (DIN EN 60811-404)
Cable: Acid and alkali resistant	No
Cable: Silicone-free	Yes
Cable: UV resistance	Yes
Commercial data	
Eclass	27060311

Side A

Technical drawing

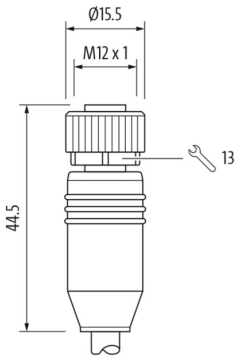

Side A

Coding

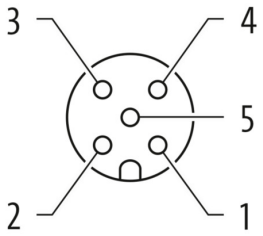

The product features and technical data specified do not express or imply any warranty. Technical modifications subject to change.
2025-07-29

ESG 34CP0200G

Article Number: 11229672

Side B

Technical drawing

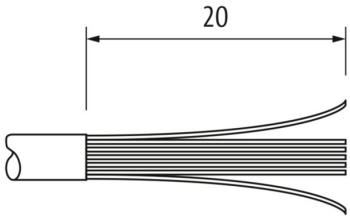

Connection diagram

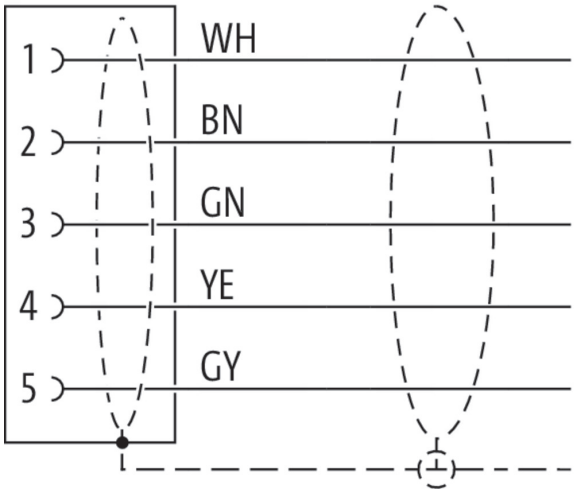

Dimension drawing

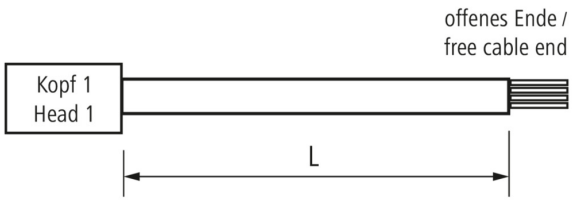

2025-07-29 The product features and technical data specified do not express or imply any warranty. Technical modifications subject to change.