Baumer
Passion for Sensors

Diffuse sensor with intensity difference

FZAM 30P5002

Article number: 10215003

Overview

- Diffuse sensor with intensity difference: sensing distance 300…1500 mm
- Fiber optic sensor in conjunction with Baumer fiber optics type A
- Pulsed infrared diode for humid or dusty environments
- Intuitive adjustment with axial 15-turn potentiometer
- Robust cylindrical M30 brass housing, nickel-plated



Picture similar

Technical data

General data	
Type	Intensity difference Fiber optic sensor
Sensing distance Tw	300 … 1500 mm
Alignment / soiled lens indicator	Flashing light indicator
Light indicator	LED yellow
Adjustment	Potentiometer, 15 turn
Sensitivity adjustment	Potentiometer, 15 turn
Light Source	
Light source	Pulsed infrared diode
Wave length	880 nm
Electrical data	
Response time / release time	< 2.5 ms
Voltage supply range +Vs	10 … 30 VDC
Current consumption max. (no load)	60 mA

Electrical data	
Current consumption typ.	50 mA
Voltage drop Vd	<2.5 VDC
Output function	Light / dark operate
Output circuit	PNP
Output current	100 mA
Short circuit protection	Yes
Reverse polarity protection	Yes
Mechanical data	
Width / diameter	30 mm
Height / length	66 mm
Design	Cylindrical threaded
Housing material	Brass nickel plated
Front (optics)	PC
Connection types	Cable 4 pin, 2 m
Ambient conditions	
Protection class	IP 65
Operating temperature	0 … +65 °C

2026-03-11 The product features and technical data specified do not express or imply any warranty. Technical modifications subject to change.

Diffuse sensor with intensity difference

FZAM 30P5002

Article number: 10215003

Dimension drawing

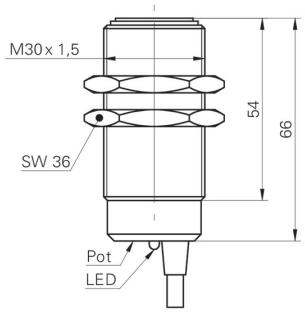

Connection diagram

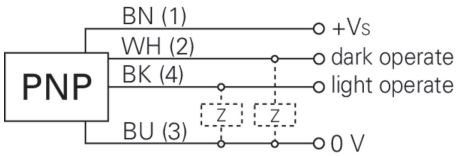

Accessories

Mounting accessories	
11200030	Sensofix series 30
11199998	ZADAP-M30.STANDARD
11199999	ZADAP-M30.LONG
11707685	Mounting rod with mounting plate holder 200 mm
11707686	Mounting rod with mounting plate holder 300 mm
11707688	Mounting rod 200 mm
11707697	Mounting rod 250 mm
11707698	Mounting rod with mounting plate holder 250 mm
11707687	Mounting rod 300 mm
11707700	Mounting plate ø30 mm
11707702	Mounting base
11707703	Two-way connector

2026-03-11 The product features and technical data specified do not express or imply any warranty. Technical modifications subject to change.