Baumer
Passion for Sensors

Incremental encoder

HS35.IL-T00H500D3

Article number: 11738401

Overview

- Built-in insulation against shaft currents up to 2.8 kV
- Output stages for cable length up to 13 779" (350 m) (HTL-P)
- Extended electronic protection circuit
- Corrosion resistance C4
- Protection IP66
- Operating temperature -22...+185 °F (-30...+85 °C)
- Pulses per revolution 5000



LongLife

Fully Reinforced Encoders

Technical data

Technical data - electrical ratings

Voltage supply	4.75...30 VDC (Vin = Vout, HTL/TTL)
Consumption w/o load	≤100 mA
Pulses per revolution	5000
Phase shift	Typ. 90 °
Duty cycle	Typ. 50 %
Reference signal	Zero pulse, width 90° or 180°
Sensing method	Optical
Output frequency typ.	≤200 kHz
Output signals	A, B, Z + inverted
Output stages	HTL-P (power linedriver)
Shaft insulation	Suitable up to 2.8 kV
Transmission length	≤13779 " (350 m) at 100 kHz (HTL-P)
Interference immunity	EN 61000-6-2
Emitted interference	EN 61000-6-4
Approval	CE UL approval / E217823 CSA

Technical data - mechanical design

Size (flange)	ø3.30", length 2.16" (ø84 mm, length 55 mm)

Technical data - mechanical design

Shaft type	ø1" (ø25.4 mm) (through hollow shaft)
Admitted shaft load	≤350 N axial ≤450 N radial
Mounting type	Hollow shaft: clamping ring
Protection EN 60529	IP 66
Operating speed	≤6000 rpm (mechanical)
Starting torque	≤6 Ncm
Rotor moment of inertia	474 gcm²
Material	Housing: aluminium, powder-coated Shaft: stainless steel
Operating temperature	-22...+185 °F (-30...+85 °C)
Resistance	IEC 60068-2-6 Vibration 20 g, 10-2000 Hz IEC 60068-2-27 Shock 300 g, 6 ms 1 Mio. brake shocks
Corrosion protection	IEC 60068-2-52 Salt mist for ambient conditions C4 according to ISO 12944-2
Connection	MIL-connector, 10-pin

Optional

- Cable gland M20 with 39.37" (1 m), 78.74" (2 m), 118.11" (3 m), 196.85" (5 m), 393.70" (10 m) cable length or M12 connector
- Aluminum shaft inserts to adapt shaft diameter 0.375"...1" or 10...20 mm
- Parameterized pulse numbers ex works on order

2026-09-02 The product features and technical data specified do not express or imply any warranty. Technical modifications subject to change.

Incremental encoder

HS35.IL-T00H500D3

Article number: 11738401

Terminal assignment

MIL-connector, 10-pin

Pin	Assignment
A	Output signal channel A
B	Output signal channel B
C	Output signal channel Z
D	+Vs
E	–
F	0 V
G	Housing
H	Output signal channel A inverted
I	Output signal channel B inverted
J	Output signal channel Z inverted

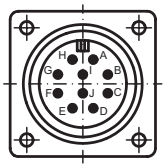

Derating

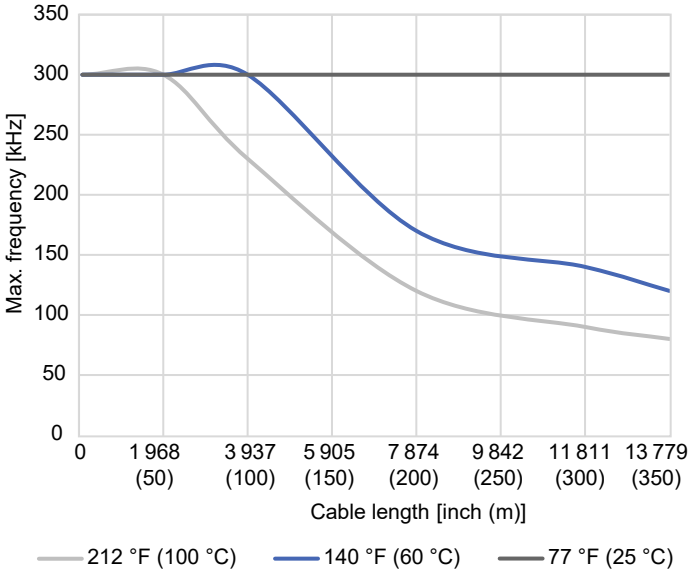

Output signals

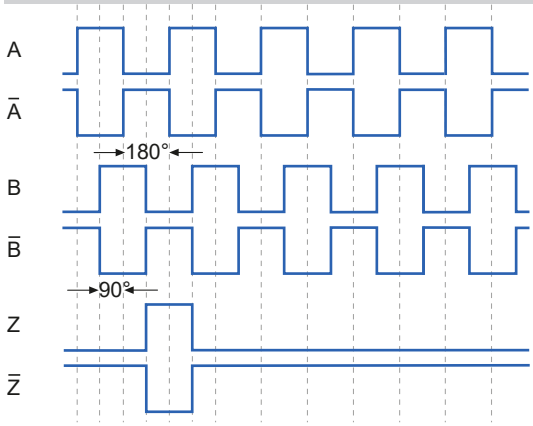

With positive direction of rotation / clockwise, with view on the encoder shaft



2026-09-02 The product features and technical data specified do not express or imply any warranty. Technical modifications subject to change.

HS35.IL-T00H500D3

Article number: 11738401

Dimensions

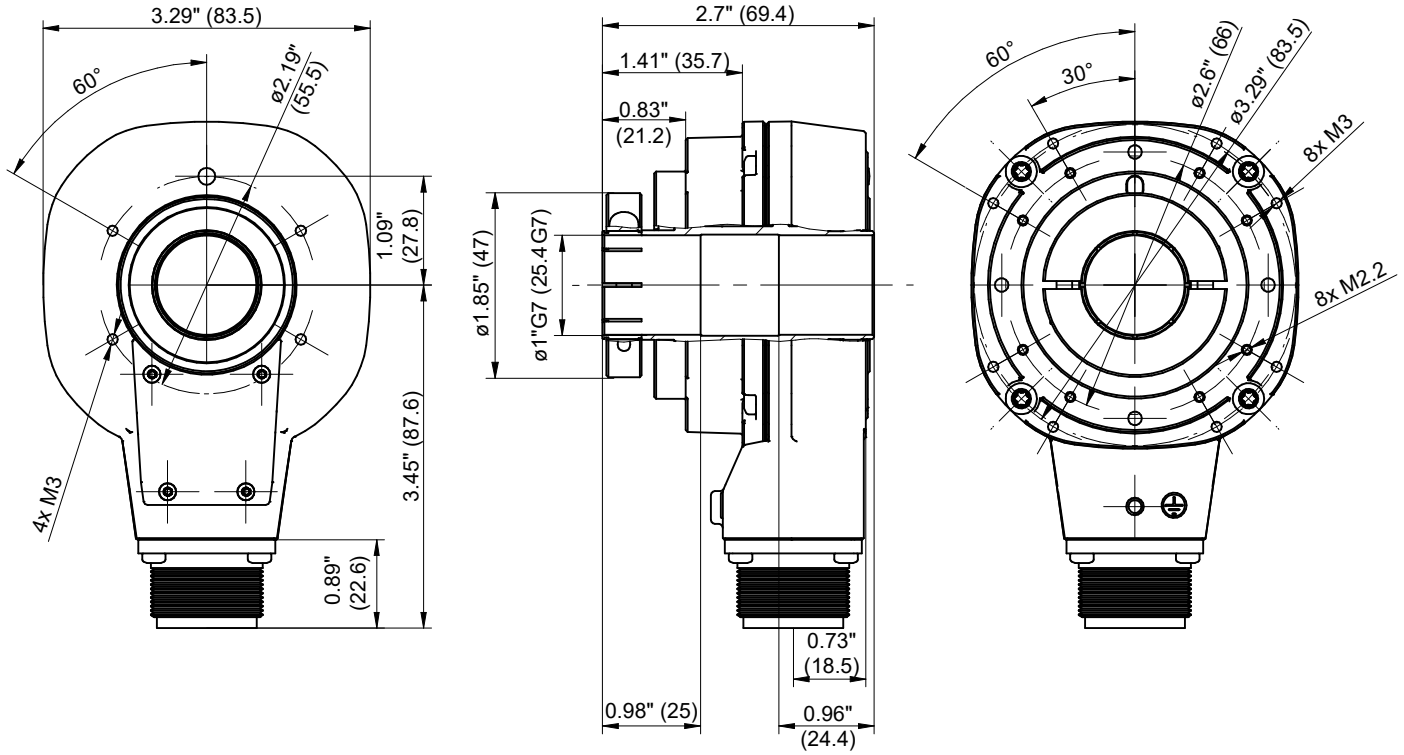

HS35.IL

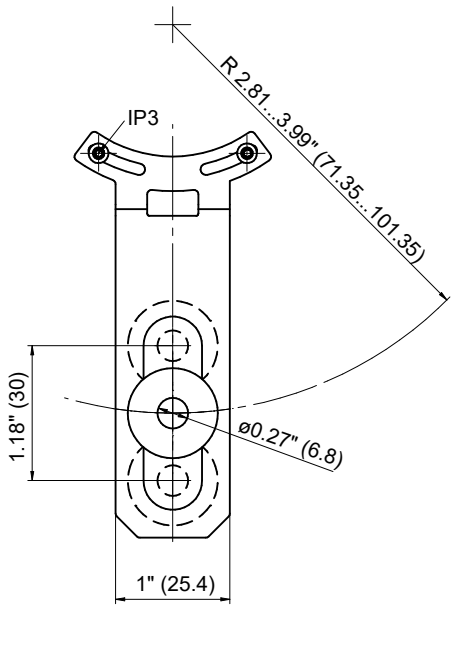

Torque support 1

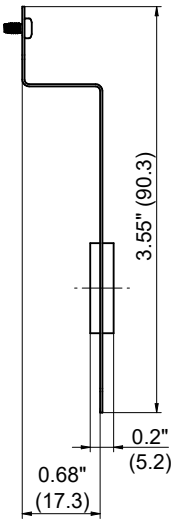

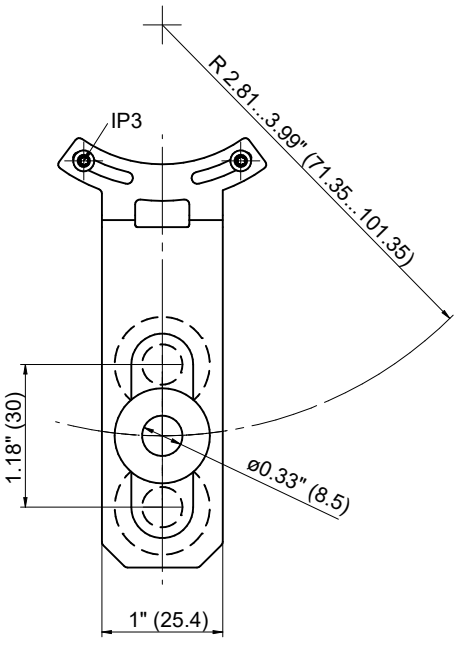

Torque support 2

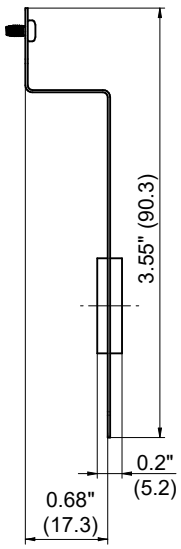

2026-09-02 The product features and technical data specified do not express or imply any warranty. Technical modifications subject to change.

HS35.IL-T00H500D3

Article number: 11738401

Dimensions

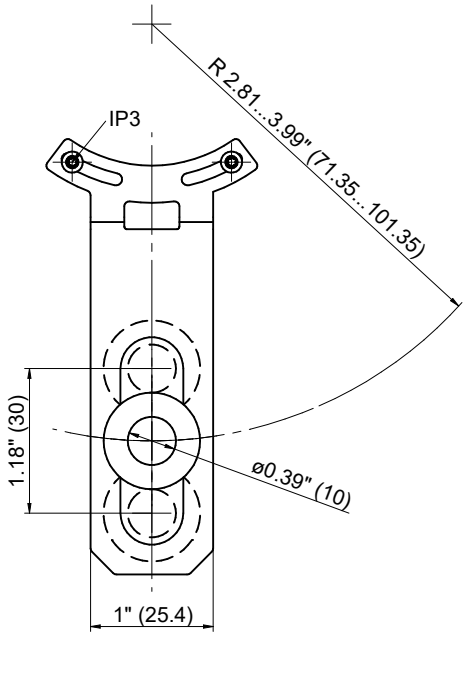

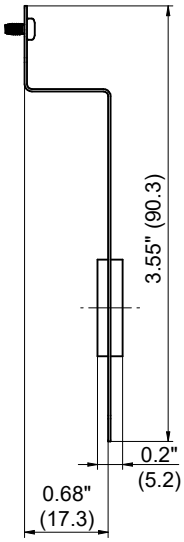

Torque support 3

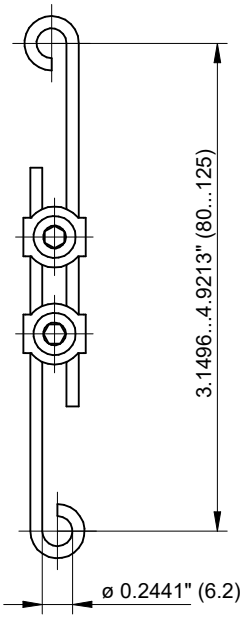

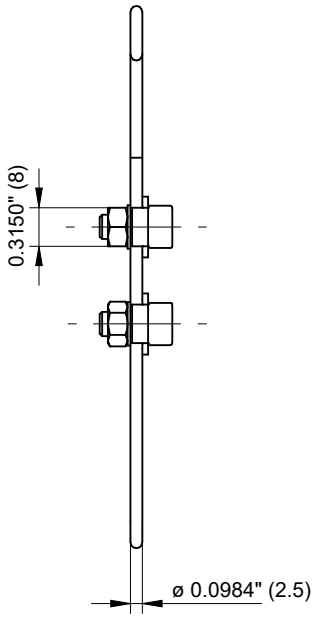

Torque support L80…125 mm

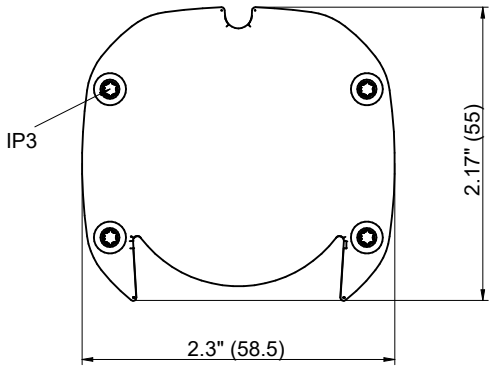

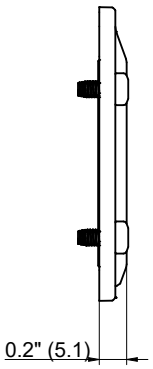

Dust protection cap

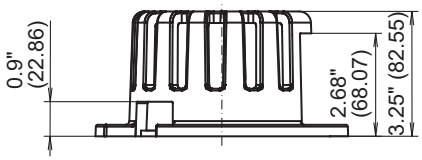

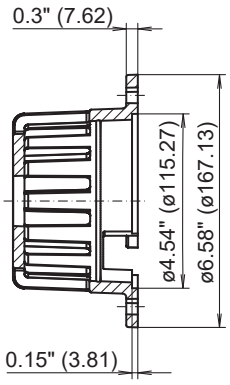

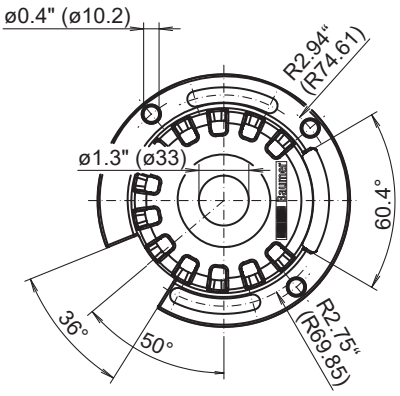

Protective cage

2026-09-02 The product features and technical data specified do not express or imply any warranty. Technical modifications subject to change.

HS35.IL-T00H500D3

Article number: 11738401

Ordering reference						
Product	**Shaft**	**Pulses per revolution, output**	**Connection**	**Comment**	**Material number**	**Article number**
HS35.IL	Through hollow shaft ø1"	1024, HTL-P	1 x MIL connector	FIX	HS35.IL-T00H300D3	11738400
		5000, HTL-P	1 x MIL connector	FIX	HS35.IL-T00H500D3	11738401

Accessories	
Mounting accessories	
11739351	Torque support 1
11739352	Torque support 2
11739353	Torque support 3
11739354	Torque support L80…125 mm
11740139	Dust protection cap HS35/EN780
11080884	Protective cage HS35
11087744	Reducer insert HS35 ø10 mm
11087745	Reducer insert HS35 ø12 mm
11087746	Reducer insert HS35 ø14 mm
11148651	Reducer insert HS35 ø15 mm
11087747	Reducer insert HS35 ø16 mm
11087748	Reducer insert HS35 ø18 mm
11087750	Reducer insert HS35 ø20 mm
11084462	Reducer insert HS35 ø0.375" (ø9.525 mm)
11078636	Reducer insert HS35 ø0.50" (ø12.7 mm)
11080114	Reducer insert HS35 ø0.625" (ø15.875 mm)
11078639	Reducer insert HS35 ø0.75" (ø19.05 mm)
11078654	Reducer insert HS35 ø0.87" (ø22.225 mm)

2026-09-02 The product features and technical data specified do not express or imply any warranty. Technical modifications subject to change.