Baumer
Passion for Sensors

Incremental encoder

HS35P.IL-T00P31PD3

Article number: 11738403

Overview

- Built-in insulation against shaft currents up to 2.8 kV
- Output stages for cable length up to 13 779" (350 m) (HTL-P)
- Extended electronic protection circuit
- Corrosion resistance C4
- Protection IP66
- Operating temperature -22...+185 °F (-30...+85 °C)
- Status monitoring with LED
- Parameterization of the resolution, output stages and zero pulse position with Baumer Sensor Suite via USB-C
- 1 x digital switch output (push)



LongLife

Fully Reinforced Encoders

Technical data

Technical data - electrical ratings	
Voltage supply	4.75...30 VDC (Vin = Vout, HTL/TTL)
Consumption w/o load	≤100 mA
Pulses per revolution	1 … 32768
Further pulses per revolution	Freely parameterizable with Baumer Sensor Suite
Phase shift	Typ. 90 °
Duty cycle	Typ. 50 %
Reference signal	Zero pulse, width 90° or 180°
Sensing method	Optical
Output frequency typ.	≤200 kHz
Output signals	A, B, Z + inverted Error output (Option)
Output stages	HTL-P (power linedriver) TTL
Shaft insulation	Suitable up to 2.8 kV
Transmission length	≤13779 " (350 m) at 100 kHz (HTL-P)
Interference immunity	EN 61000-6-2
Emitted interference	EN 61000-6-4
Approval	CE UL approval / E217823 CSA
Technical data - mechanical design	
Size (flange)	ø3.30", length 2.16" (ø84 mm, length 55 mm)
Shaft type	ø1" (ø25.4 mm) (through hollow shaft)
Admitted shaft load	≤350 N axial ≤450 N radial
Mounting type	Hollow shaft: clamping ring
Protection EN 60529	IP 66
Operating speed	≤6000 rpm (mechanical)
Starting torque	≤6 Ncm

Technical data - mechanical design	
Rotor moment of inertia	474 gcm²
Material	Housing: aluminium, powder-coated Shaft: stainless steel
Operating temperature	-22...+185 °F (-30...+85 °C)
Resistance	IEC 60068-2-6 Vibration 20 g, 10-2000 Hz IEC 60068-2-27 Shock 300 g, 6 ms 1 Mio. brake shocks
Corrosion protection	IEC 60068-2-52 Salt mist for ambient conditions C4 according to ISO 12944-2
Connection	MIL-connector, 10-pin
Technical data - digital switches	
Function	Combination with one digital switch: • Overspeed and underspeed detection • Standstill and creep monitoring • Direction of rotation display • Warning or failure events • Parameterizable with Baumer Sensor Suite
Switching outputs	Output (Push)
Number of switching outputs	1
Technical data - digital speed switches	
Function	Detection of overspeed and underspeed
Max. number of switching outputs	1
Parametrization	Speed range Hysteresis Switching delay
Speed setting resolution	0.1 rpm
Switching accuracy	± 2 % (±1 rpm at 50 rpm)

2026-09-02 The product features and technical data specified do not express or imply any warranty. Technical modifications subject to change.

HS35P.IL-T00P31PD3

Article number: 11738403

Technical data

Technical data - standstill monitoring

Function	Detection of standstill and creep
Max. number of switching outputs	1
Parametrization	Dwell time Standstill position window
Activation Speed	±2 rpm

Technical data - direction of rotation

Function	Detection and display of the direction of rotation
Max. number of switching outputs	1
Parametrization	Hysteresis

Optional

- Cable gland M20 with 39.37" (1 m), 78.74" (2 m), 118.11" (3 m), 196.85" (5 m), 393.70" (10 m) cable length or M12 connector
- Aluminum shaft inserts to adapt shaft diameter 0.375"...1" or 10...20 mm

2026-09-02 The product features and technical data specified do not express or imply any warranty. Technical modifications subject to change.

HS35P.IL-T00P31PD3

Article number: 11738403

Baumer Sensor Suite

Monitoring

The following information is displayed with the Baumer Sensor Suite:

- Encoder settings
- Speed and position over time
- Current speed, position and temperature
- Encoder status
- Minimum and maximum temperature over entire service life
- Total operating time
- Total revolutions
- Switch monitoring
  - Switch status
  - Speed over time per switch with switching window
  - Switch status over time
  - Direction of rotation status
  - Status of standstill monitoring

Parameterization

The following parameters can be set via USB-C access with the Baumer Sensor Suite:

- Number of lines per mechanical revolution
- Output stages
- Reference length and phase
- Setting the user units
- Switching outputs
  - Switching active high, active low
  - Speed switch
  - Direction of rotation switch
  - Standstill switch
- Time behavior for switching outputs
  - Minimum switch-on time (On)
  - Minimum switch-off duration (Off)

Parameterization - encoder

Pulses per revolution	Selection: 50, 500, 512, 1000, 1024, 2048, 2500, 4096, 5000 + free input
Output stages	HTL-P (power linedriver) TTL
Rotating direction	CW, CCW
Width of zero pulse	90°, 180° (reference signal)

Parameterization - digital switches

Min. switch-on time	1...1000 ms
Min. switch-off time	1...1000 ms

Baumer Sensor Suite

Parameterization - digital speed switch

Function	Speed switch with adjustable speed limits and switching delay to filter out short-term speed peaks
Switching output	Active high / active low
Upper/lower speed range	±2 … 6000 rpm
Hysteresis	0...50 %
Switching delay time	0...5000 ms (0 ms default)

Parameterization - standstill monitoring

Function	Reliable creep detection through position monitoring if the speed falls below a specified speed within a defined time window
Dwell time	10...1000000 ms
Creep Window	1...100°

Parameterization - direction of rotation

Function	Direction detection with adjustable hysteresis
Switching output	Active high / active low
Hysteresis	1...100°

The product features and technical data specified do not express or imply any warranty. Technical modifications subject to change.
2026-09-02

HS35P.IL-T00P31PD3

Article number: 11738403

Terminal assignment

MIL-connector, 10-pin

Pin	Assignment
A	Output signal channel A
B	Output signal channel B
C	Output signal channel Z
D	+Vs
E	Switch output (push)
F	0 V
G	Housing
H	Output signal channel A inverted
I	Output signal channel B inverted
J	Output signal channel Z inverted

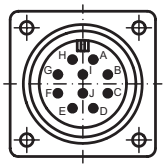

Output signals

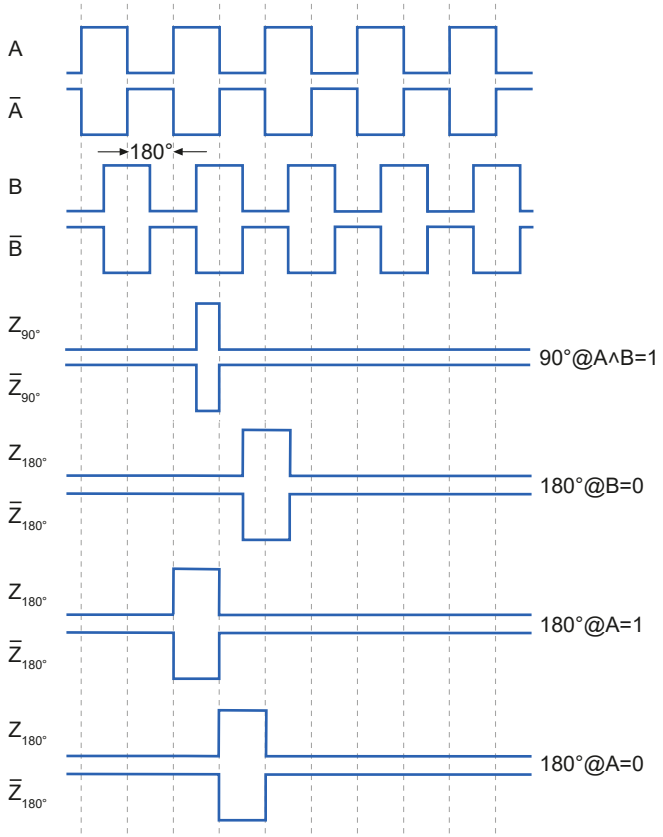

Output signals

With positive direction of rotation / clockwise, with view on the encoder shaft



Derating

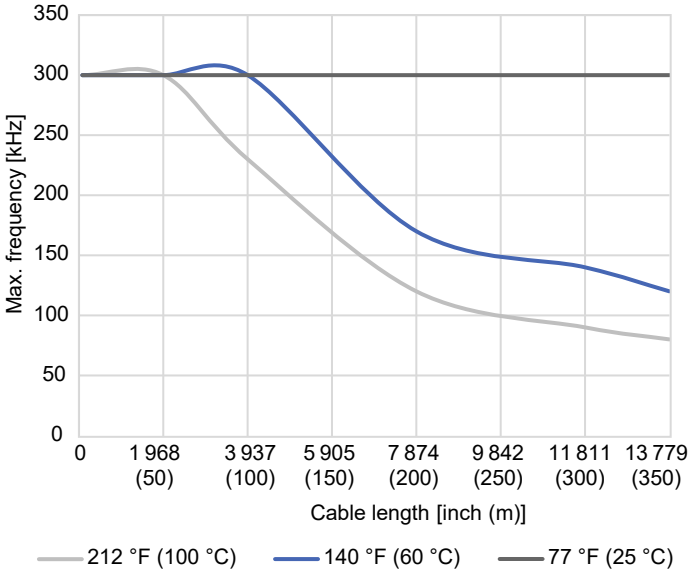

2026-09-02 The product features and technical data specified do not express or imply any warranty. Technical modifications subject to change.

HS35P.IL-T00P31PD3

Article number: 11738403

Dimensions

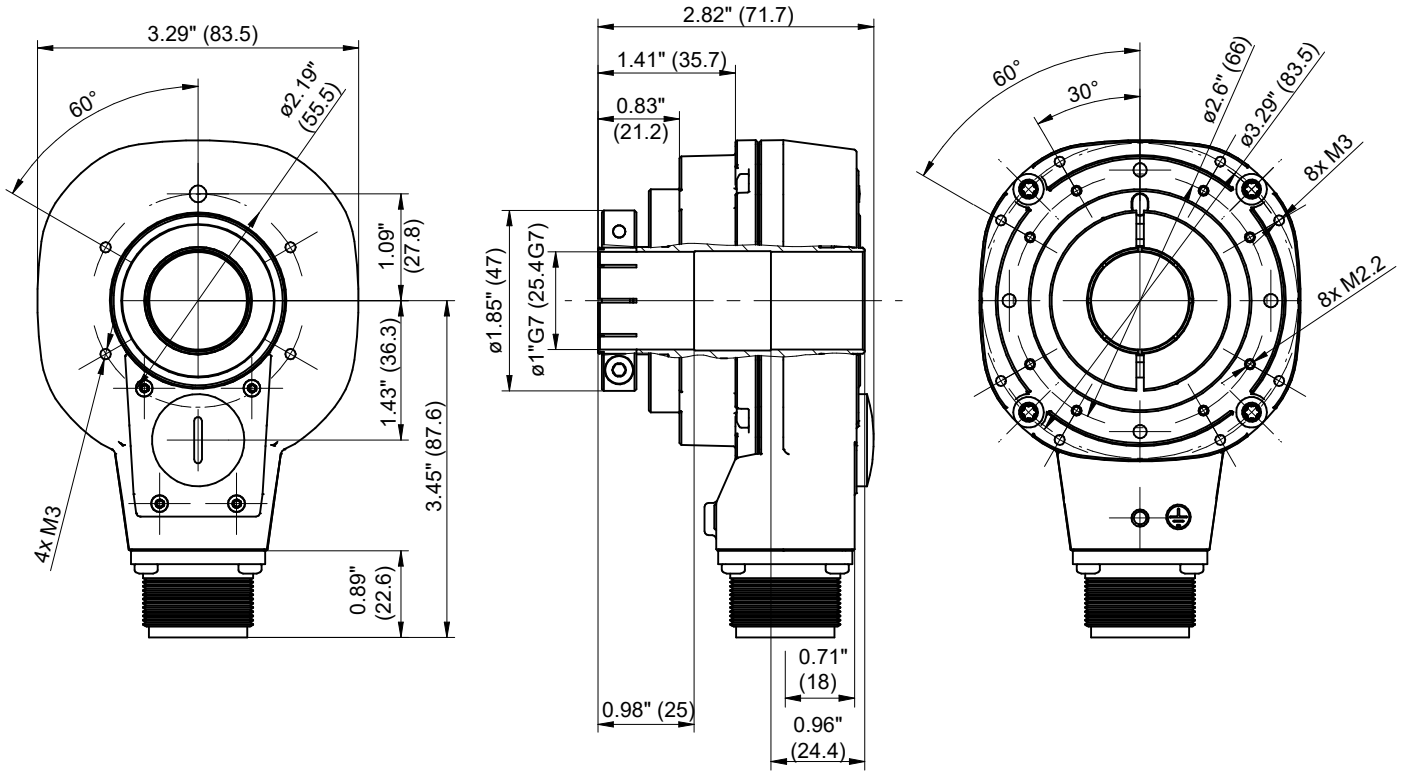

HS35P.IL

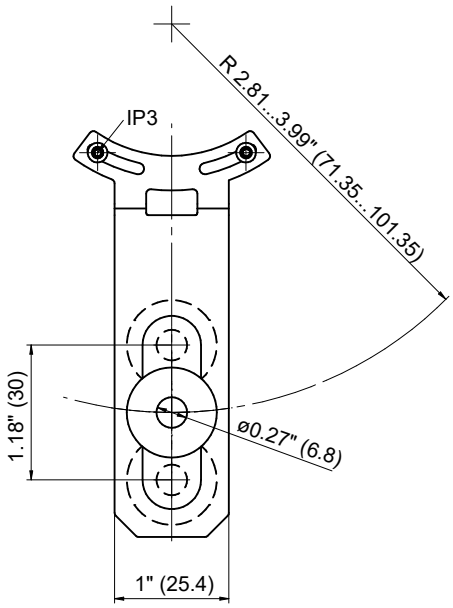

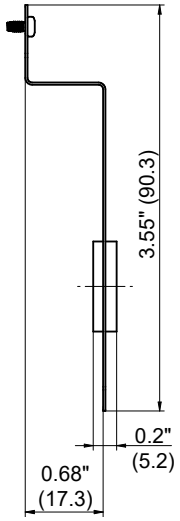

Torque support 1

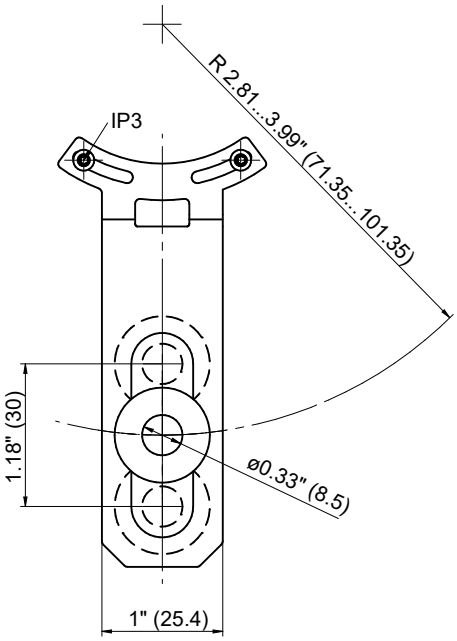

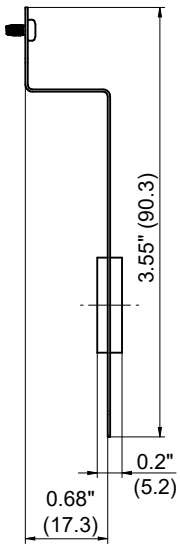

Torque support 2

2026-09-02 The product features and technical data specified do not express or imply any warranty. Technical modifications subject to change.

HS35P.IL-T00P31PD3

Article number: 11738403

Dimensions

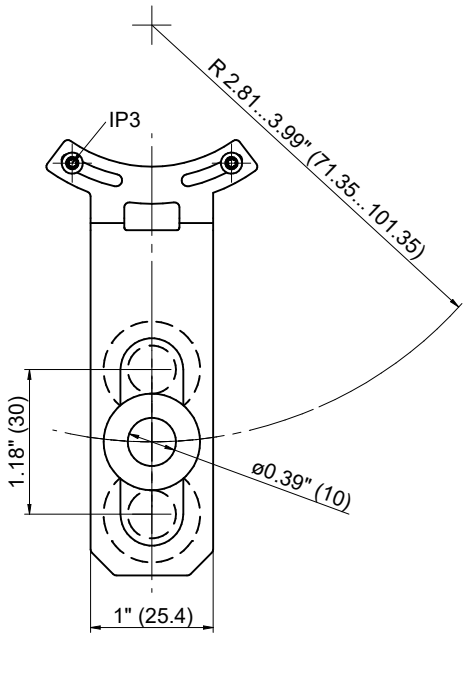

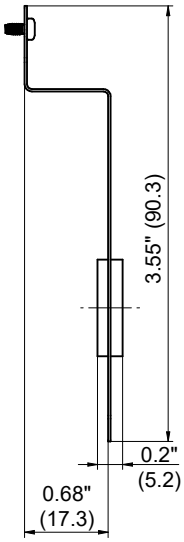

Torque support 3

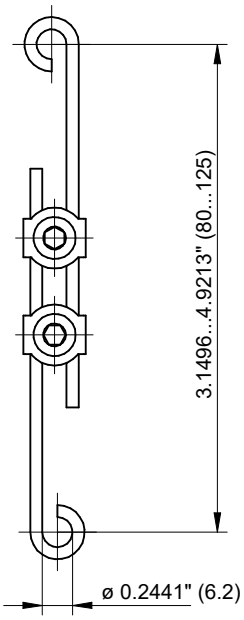

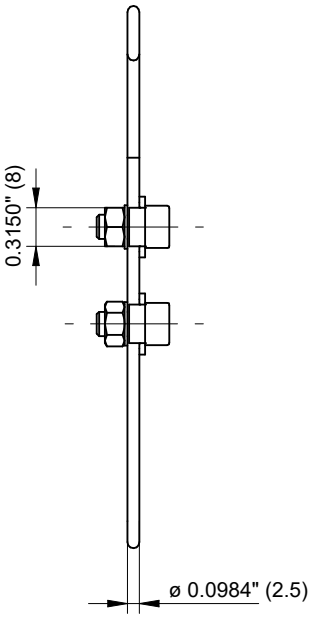

Torque support L80…125 mm

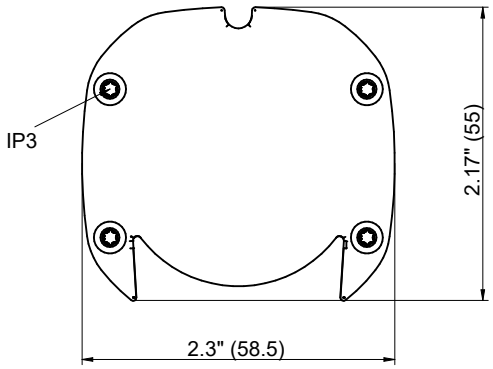

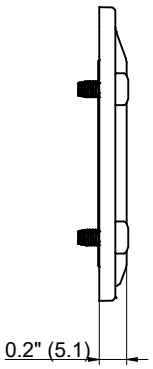

Dust protection cap

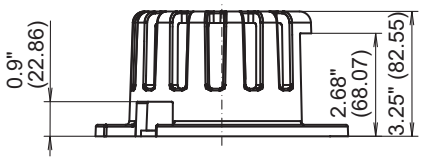

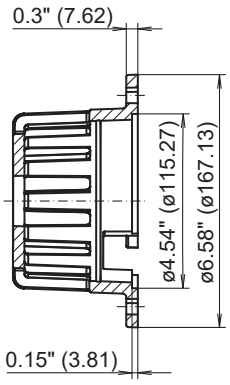

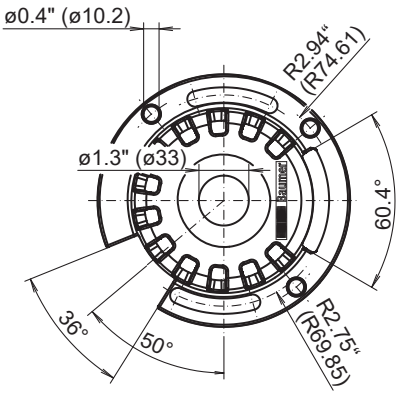

Protective cage

2026-09-02 The product features and technical data specified do not express or imply any warranty. Technical modifications subject to change.

HS35P.IL-T00P31PD3

Article number: 11738403

Ordering reference						
Product	**Shaft**	**Pulses per revolution, output**	**Connection**	**Comment**	**Material number**	**Article number**
HS35P.IL	Through hollow shaft ø1"	Parameterization & monitoring at customer	1 x MIL connector	SMART	HS35P.IL-T00P300D3	11738402
		Parameterization & monitoring at customer	1 x MIL connector	1 x Push	HS35P.IL-T00P31PD3	11738403

Accessories	
Mounting accessories	
11739351	Torque support 1
11739352	Torque support 2
11739353	Torque support 3
11739354	Torque support L80…125 mm
11740139	Dust protection cap HS35/EN780
11080884	Protective cage HS35
11087744	Reducer insert HS35 ø10 mm
11087745	Reducer insert HS35 ø12 mm
11087746	Reducer insert HS35 ø14 mm
11148651	Reducer insert HS35 ø15 mm
11087747	Reducer insert HS35 ø16 mm
11087748	Reducer insert HS35 ø18 mm
11087750	Reducer insert HS35 ø20 mm
11084462	Reducer insert HS35 ø0.375" (ø9.525 mm)
11078636	Reducer insert HS35 ø0.50" (ø12.7 mm)
11080114	Reducer insert HS35 ø0.625" (ø15.875 mm)
11078639	Reducer insert HS35 ø0.75" (ø19.05 mm)
11078654	Reducer insert HS35 ø0.87" (ø22.225 mm)

2026-09-02 The product features and technical data specified do not express or imply any warranty. Technical modifications subject to change.