Baumer
Passion for Sensors



Operating Manual

HS35

Incremental encoder (through-hollow shaft)

EN-US

V1 | 8/7/2026

Table of contents

1 About this document 3
1.1 Purpose 3
1.2 Warnings in this manual 3
1.3 Labels in this manual 4
1.4 Disclaimer 4
1.5 Scope of delivery 4
1.6 Applicable documents 4
1.7 Name plate 5
1.8 Maintenance and service life 5
1.9 Approvals and warranty 5
1.10 Temperature range for operation and storage 5
2 General information 6
3 Transport and storage 7
3.1 Transport 7
3.2 Delivery inspection 7
3.3 Storage 7
4 Description 8
4.1 Mounting accessories (not included) 8
5 Installation 9
5.1 Mounting the torque arm with variable length 9
5.2 Installing the torque arm with variable radius for direct mount 10
5.3 Mounting the encoder 11
5.3.1 Installation – through hollow shaft variants 12
5.4 Mounting torque arm to drive 13
5.5 Avoiding and calculating angular errors 13
6 Electrical installation 14
6.1 Connecting the supply cable to the encoder 14
6.2 Connection assignment 16
6.3 HEK 8 - Sensor cable 18
6.4 Output signals 19
6.5 Optional LED indicator 19
7 Disassembly 21
7.1 Uninstall encoder 21
8 Maintenance 24
9 Dimensional drawings 25

1 About this document

1.1 Purpose

This operating manual (subsequently referred to as *manual*) allows the safe and efficient handling of the product .

The manual does not provide instructions on operating the machine in which the product is integrated. Information on this is found in the operating manual of the machine.

The manual is a constituent part of the product. It must be kept in the immediate vicinity of the product and must be accessible to personnel at all times.

Personnel must have carefully read and understood this manual before beginning any work. The basic prerequisite for safe working is compliance with all safety instructions and handling instructions given in this manual.

In addition, the local occupational health and safety regulations and general safety regulations apply.

The illustrations in this manual are examples only. Deviations are at the discretion of Baumer at all times.

1.2 Warnings in this manual

Warnings draw attention to potential personal injury or material damage. The warnings in this manual indicate different hazard levels:

Symbol	Warning term	Explanation
	**DANGER**	Indicates an imminent potential danger with high risk of death or serious personal injury if not being avoided.
	WARNING	Indicates potential danger with medium risk of death or (serious) personal injury if not being avoided.
	CAUTION	Indicates a danger with low risk, which could lead to light or medium injury if not avoided.
	NOTE	Indicates a warning of material damage.
	**INFO**	Indicates practical information and tips that enable optimal use of the devices.

1.3 Labels in this manual

Identifier	Usage	Example
Dialog element	Indicates dialog elements.	Click ***OK***.
Unique name	Indicates the names of products, files, etc.	*Internet Explorer* is not supported in any version.
`Code`	Indicates entries.	Enter the following IP address: `192.168.0.250`

1.4 Disclaimer

The manufacturer is not liable for personal injury and/or property damage resulting from improper use of the device.

1.5 Scope of delivery

Included in the delivery:

- Rotary encoder
- Quickstart
- General information sheet

1.6 Applicable documents

- Download at www.baumer.com:
  - Instruction manual
  - Manual BSS
  - Data sheet
  - EU Declaration of Conformity
  - Certificates and Approvals
- Attached to product:
  - General information sheet
  - Quickstart

1.7 Name plate

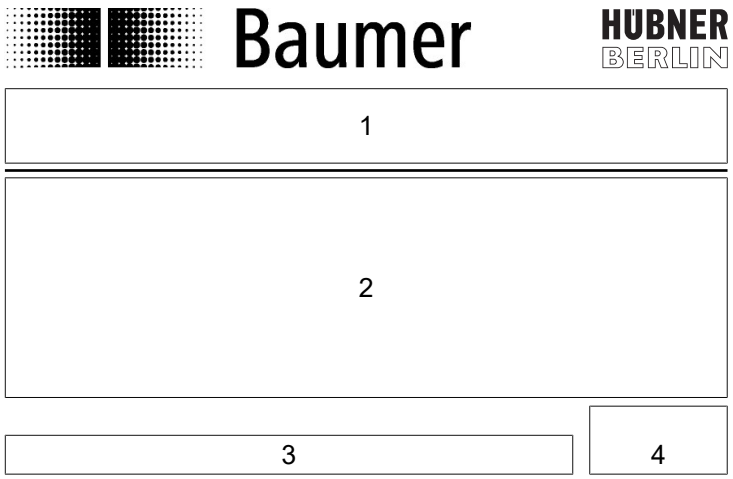

1	Product name, product code, material number	2	Serial number, technical data
3	Baumer Website	4	Labels

1.8 Maintenance and service life

The device must not be opened unless for assembly and maintenance work as described in this instruction manual. Any repair or maintenance work requiring fully opening the device must be carried out by the manufacturer only.

Do not perform any modifications at the device.

The expected service life of the device depends on the ball bearings featuring permanent lubrication.

For any queries or subsequent deliveries refer to the product data specified on the device label, in particular type and serial number.

1.9 Approvals and warranty

Declaration of conformity according to the prevailing country-specific directives.

We grant a 2-year warranty in line with the conditions of the German Electrical and Electronic Manufacturers' Association (ZVEI).

INFO

warranty seal

Any breaking of the seal provided at the device will result in loss of warranty.

1.10 Temperature range for operation and storage

Storage temperature range: +5 ... +158 °F (-15 ... +70 °C)

Operating temperature range: -22 ... +185 °F (-30 ... +85 °C)

2 General information

Intended use

This product is a precision device and serves the detection of items, objects, or physical measurement variables and the preparation or provision of measured values as electric variables for the higher-level system.

Unless specifically labeled, this product may not be used in explosive environments.

Commissioning

Assembly, installation, and calibration of this product may only be performed by a specialist.

Installation

Only use the fasteners and fastener accessories intended for this product for installation. Unused outputs must not be assigned. Any unused cable wires must be insulated. Observe the minimum permitted cable bending radius. The system must be disconnected from the power supply before connecting the product electrically. Use shielded cables for protection against electromagnetic interference. Where connectors to shielded cables are attached by the customer, these must be EMC compliant and the cable shield must contact a large surface area of the connector housing.

Disposal (environmental protection)

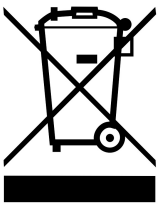

Used electrical and electronic devices may not be disposed of in household waste. The product contains valuable raw materials that can be recycled. Therefore dispose of this product at the appropriate collection point. For additional information visit www.baumer.com.

3 Transport and storage

3.1 Transport

NOTICE

Material damage due to improper transport.

a) Ensure maximum diligence when unloading the delivered packages as well as when transporting them inside the company.

b) Note the information and symbols on the packaging.

c) Only remove packaging immediately before mounting.

3.2 Delivery inspection

Upon receipt immediately inspect the delivery for completeness and transport damage.

Claim any defect as soon as it is detected. Damages can only be claimed within the applicable claims deadlines.

In case of externally visible transport damage, proceed as follows:

Instruction:

a) Do not accept the delivery or only with reservations.

b) Note the scope of the damage on the transport documents or the delivery slip of the carrier.

c) Initiate the claim.

3.3 Storage

Store the product at the following conditions:

- Only transport or store the device in its original packaging.
- Do not store outdoors.
- Store dry and free from dust.
- Do not expose to aggressive media.
- Keep away from the sun.
- Avoid mechanical agitation.
- Storage temperature: +5 ... +158 °F (-15 ... +70 °C)..
- When storing for longer than 3 months, regularly check the general state of all parts and the packaging.

4 Description

4.1 Mounting accessories (not included)

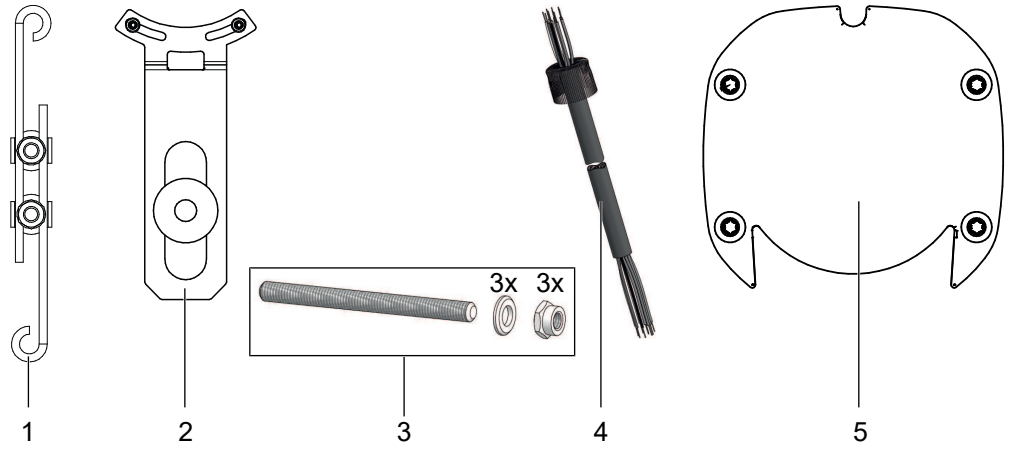

Ill. 1: Mounting accessories

1	Torque arm with variable length	2	Torque arm for direct mount
3	Mounting kit, reference number 11077197	4	Sensor cable HEK 8
5	Dust cap		

Torque arm	Order number	Position Fig. 1
L80 ... 125 mm	11739354	1
Torque arm 1	11739351	2
Torque arm 2	11739352	2
Torque arm 3	11739353	2

5 Installation

NOTICE

Equipment damage due to mechanical impact

Strong vibration may lead to overload by constraining force.

a) Never apply force. If properly performed, all components can be mounted smoothly.

NOTICE

Equipment damage by adhering liquids

Sticky liquids may damage sensing unit and ball bearings. Disassembling a device which is stuck to the axis can lead to destruction.

a) Do not use adhesive liquids to fasten the device.

5.1 Mounting the torque arm with variable length

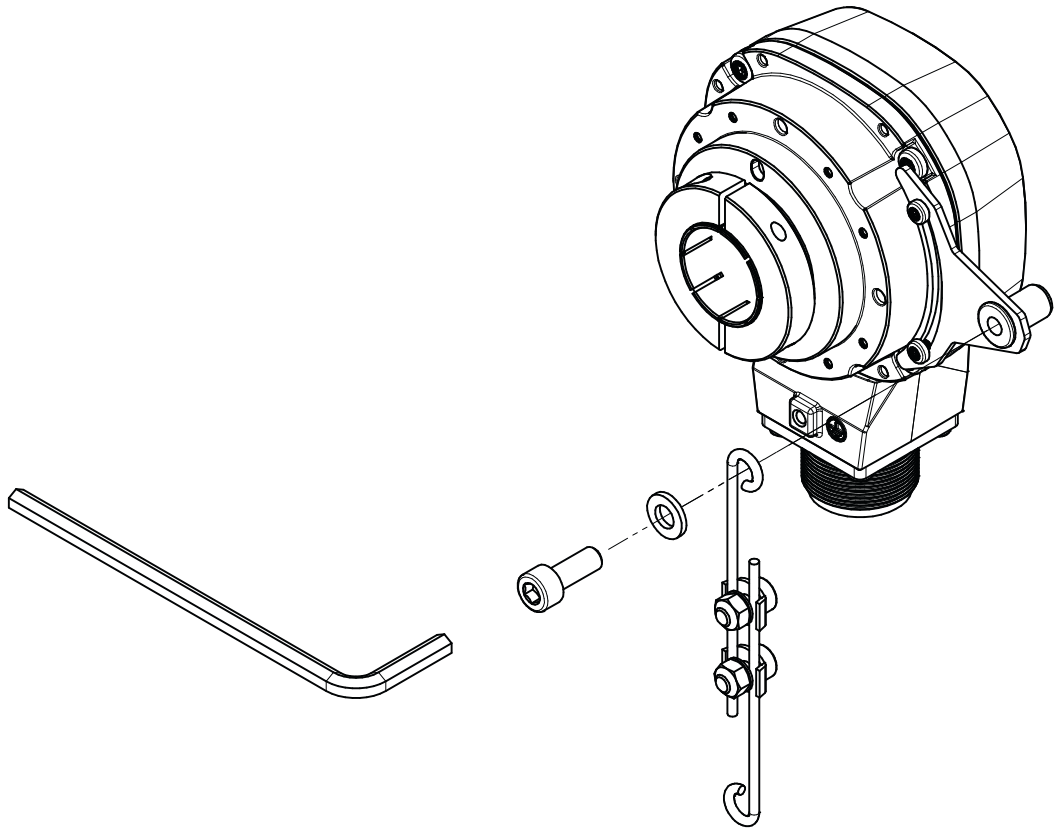

Ill. 2: Torque arm with variable length

The torque arm with variable length allows for installing an encoder with torque plate.

The encoder comes with the torque plate already mounted. The torque arm L80 ... 125 mm is available as an accessory (11739354).

Tool

- 5 mm
- 10 mm

Instruction:

- Screw torque arm with washers to the torque plate using a hexagon screw (M6 x 24)(tightening torque 6.5 ±0,5 Nm, strength class 6.8).

5.2 Installing the torque arm with variable radius for direct mount

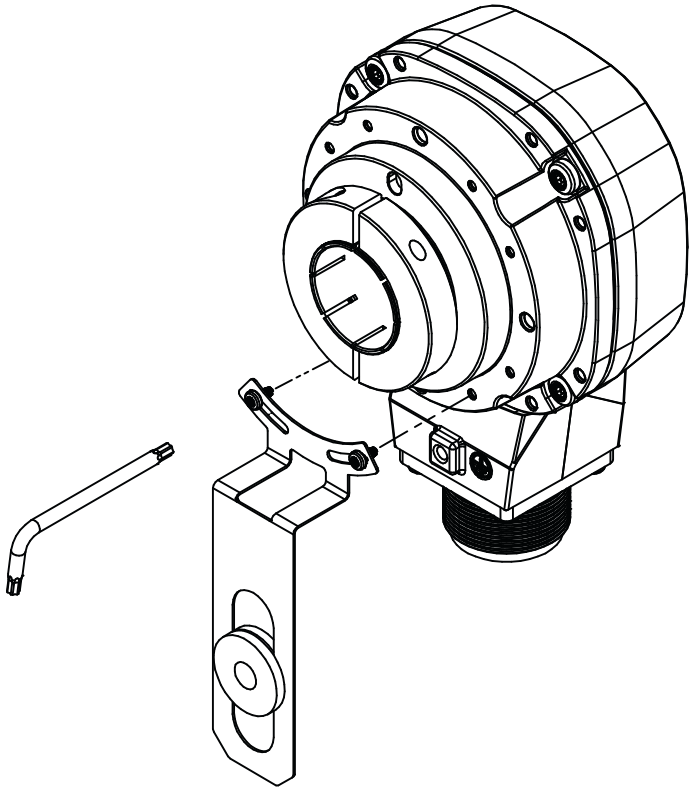

Ill. 3: Mounting the torque arm

The torque arm can be directly attached to an encoder without torque plate.

Tool

- Torx 7IP

Instruction:

- Screw the torque plate to the encoder using 2 screws similar to DIN 7500-1, Type PE, M2.2 (tightening torque 0.8 ±0,1 Nm).
  Make sure to use thread-forming screws. The mounting holes are without initial thread, this is formed when tightening the screw.

5.3 Mounting the encoder

⚠ DANGER

Injuries caused by shaft rotation

Hair and clothing can get tangled in rotating shafts. This can lead to serious injuries.

a) Make sure that the device is idle.

b) Prior to performing any work at the device, make sure power supply is and will remain off.

⚠ DANGER

Explosion

Sparks may cause fire or explosion.

a) Do not use the device in the near vicinity of explosive or highly flammable materials.

NOTICE

Severe runout errors of the drive shaft reduce service life and may cause angular errors.

Severe runout errors of the drive shaft cause vibrations that cut down on the encoder service live and may cause angular errors.

a) Keep runout errors of drive shaft down to a minimum (recommended: ≤ 0.03 mm; maximum: ≤ 0.2 mm).

NOTICE

Equipment damage by mechanical overload

Rigid mounting may cause overload by constraining forces.

a) Do not limit the device mobility.

b) Observe the mounting instructions.

c) Adhere to the specified distances and/or angles.

5.3.1 Installation – through hollow shaft variants

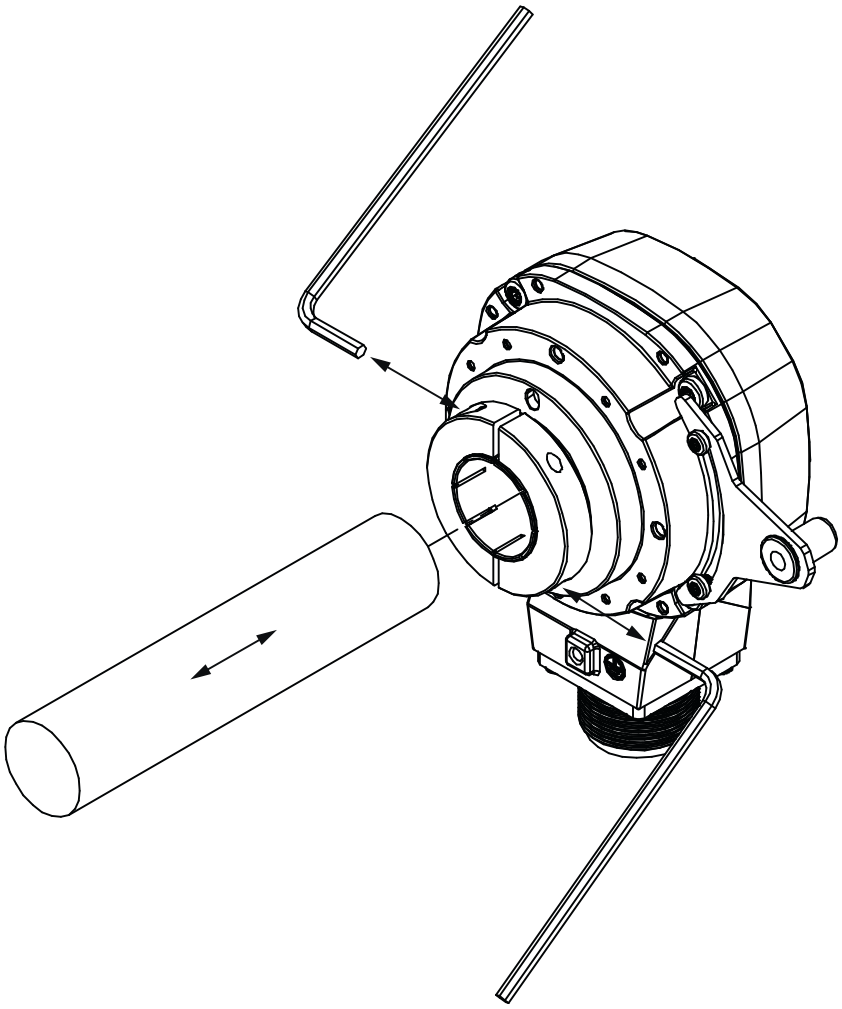

Ill. 4: Mounting the encoder

Tool:

- 3 mm

Instruction:

a) Apply a small amount of grease onto the drive shaft. Only use grease or oil specifically intended for lubrication.

b) Check the drive shaft. The drive shaft should have the smallest possible runout error, as this will lead to angular errors. Runout errors cause vibrations that may cut down on service life

c) Loosen a little bit the hex screws provided the clamping ring.
WARNING! Do not unscrew completely.

d) Place the encoder onto the shaft.

e) Tighten the screws. During installation, tighten the screws gradually and alternately to ensure the same gap on both sides.
Tightening torque for 3mm hex socket (M4 screw): 2.4 ±0,2 Nm

5.4 Mounting torque arm to drive

NOTICE

Incorrect mounting of the torque arm may reduce service life and cause angular errors
For example, ±0,03 mm torque arm backlash would result in a run-out error of 0,06 mm at the drive shaft and may entail a severe angular error.

a) No backlash in torque arm mounting.

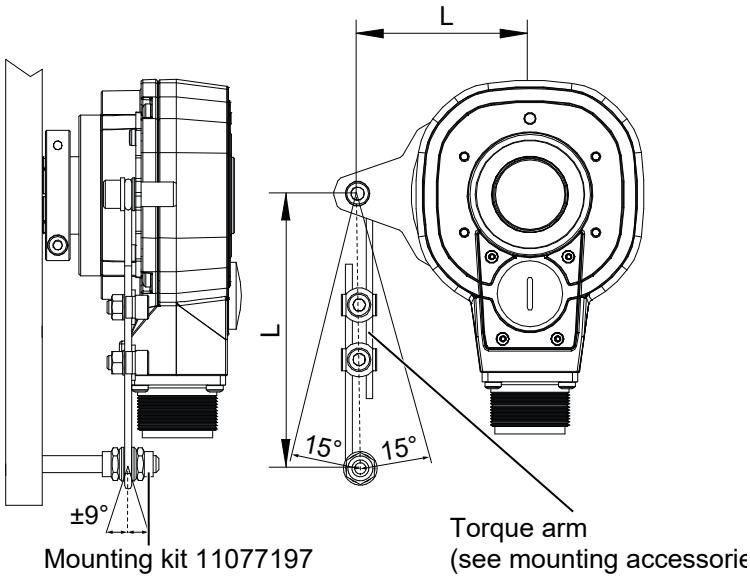

Instruction:

- Mount the torque arm in a way that the shift towards the torque plate's right angle does not exceed 15° to the left or right.

5.5 Avoiding and calculating angular errors

Instruction:

a) Make sure that the drive runout error does not exceed 0.2 mm (0.03 mm recommended) to prevent angular errors.

b) Keep angular errors by concentricity run-out at a minimum by increasing gap L1. For doing so, various torque plates for are available on request.

c) Note that length L2 of the torque arm should be ≥ L1.

d) Angular error Δp_{mech} calculation is as follows (mit R = runout error in mm and L1 =vertical gap of torque arm towards device center in mm):
$\Delta p_{mech} = \pm 90°/\pi \times R/L1$
calculation example:
R= 0.06 mm and L1 = 69.5 mm equals an angular error of Δp_{mech} von ±0.025°.

6 Electrical installation

⚠ DANGER

Injury by to secondary damage

Encoder failure or incorrect signals may entail system control errors.

a) Eliminate secondary encoder damage by the relevant safety precautions in the downstream electronics.

NOTICE

Sensor damage due to faulty power supply.

The sensor can be damaged due to faulty power supply.

a) Operate the sensor only with protected low voltage and safe electrical isolation of protection class III.

NOTICE

Sensor damage or unintended operation due to work on live parts.

Work on live parts may lead to unintentional operation.

a) Disconnect the power before carrying out any cable.

b) Disconnect the power before connecting or disconnecting electrical connections.

NOTICE

Sensor damage by excessive switching voltage.

The sensor's overload limit is for protection only and not intended as limit for the permanently switching voltage.

a) Make sure that the maximum permitted switching voltage is not exceeded.

6.1 Connecting the supply cable to the encoder

NOTICE

Equipment damage by ESD

The electronic components in the device are sensitive to high voltage

a) Do not touch terminals or electronic components.

b) Protect output terminals from external voltage.

c) Do not exceed the maximum operating voltage.

NOTICE

Equipment damage by soiling

Soiling may cause short circuiting and damage of the sensing unit.

a) Ensure absolute cleanliness at all times when working with the device.

b) Prevent any oil or grease from penetrating inside the device.

NOTICE

Equipment damage due to dust or moisture

Inappropriate cable diameters may entail ingress of dust or moisture. In this case, the protection class is no longer ensured causing device failure or malfunction.

a) Use only appropriately sized cables to make sure the specified protection class is being ensured.

INFO

Connection cables are not included in delivery.

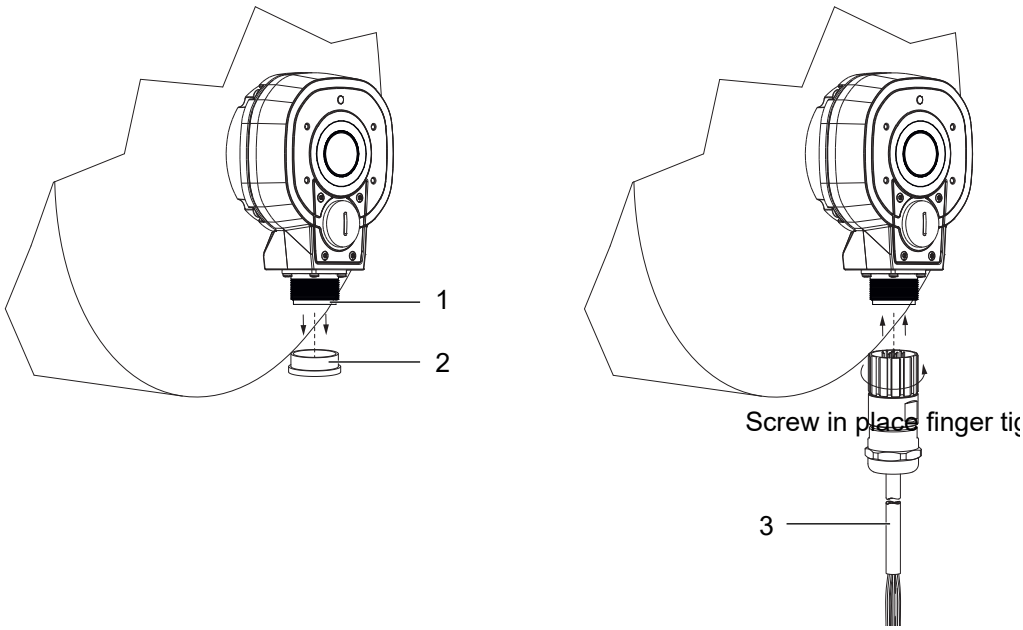

Ill. 5: Cable connection

1	MIL flange connector, 10-pin, male contacts, clockwise rotation	2	Protective cap
3	Sensor cable HEK 8 available as accessory		

Instruction:

a) Remove protective cap (2) and connect the prepared cable to the mating flange connector (1).

b) Screw finger tight.

Recommended to use the Baumer sensor cable HEK 8 or alternatively a shielded cable twisted in pairs. Cable routing should be in one piece and away from power supply lines.

- Differential cable connection:
  - HTL: 1 ... 3 kΩ
  - TTL: 120 Ω
- Use wire end ferrules of correct size.
- Outer cable diameter (variant-specific):
  - M20: 5-13 mm
  - M25: 12,5-20,5 mm
    (12,5-15,5 mm with insert, 15,5-20,5 mm without insert)
  - ATEX /IECex: 6-12 mm
  - Stainless steel (for X-variant resp. DNV): 7-12 mm

6.2 Connection assignment

HS35.IL



MIL connector, 10-pin	
Pin	**Belegung**
A	Output signal A
B	Output signal B
C	Output signal Z
D	+Vs
E	–
F	0 V
G	Housing
H	Output signal A inverted
I	Output signal B inverted
J	Output signal Z inverted

HS35P.IL



1	USB port, sealed with cap

MIL connector, 10-pin	
Pin	**Belegung**
A	Output signal A
B	Output signal B
C	Output signal Z
D	+Vs
E	–
F	0 V
G	Housing
H	Output signal A inverted
I	Output signal B inverted
J	Output signal Z inverted

USB ENC1	USB-C for parameterization

6.3 HEK 8 - Sensor cable

INFO

Recommended to use sensor cable HEK 8 or alternatively a shielded cable twisted in pairs. Cable routing should be in one piece and away from power supply lines.

Cable connection:

- HTL: 1 ... 3 kΩ
- TTL: 120 Ω

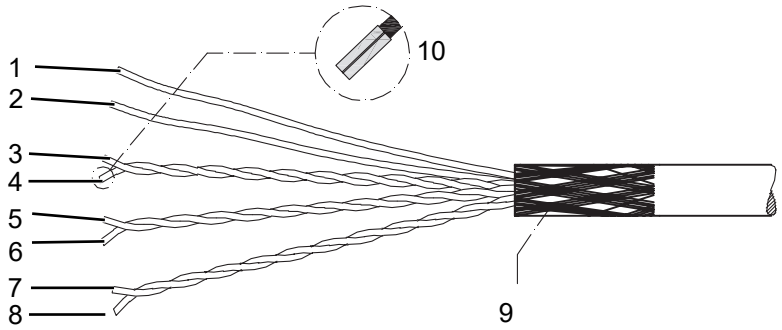

Ill. 6: Sensor cable HEK 8

1	Red = +UB	2	Blue = 0V (⊥)
3	White = K1	4	Brown = $\overline{K1}$
5	Green = K2	6	Yellow = $\overline{K2}$
7	Gray = K0	8	Pink = $\overline{K0}$
9	Cable shield	10	Use ferrules

6.4 Output signals

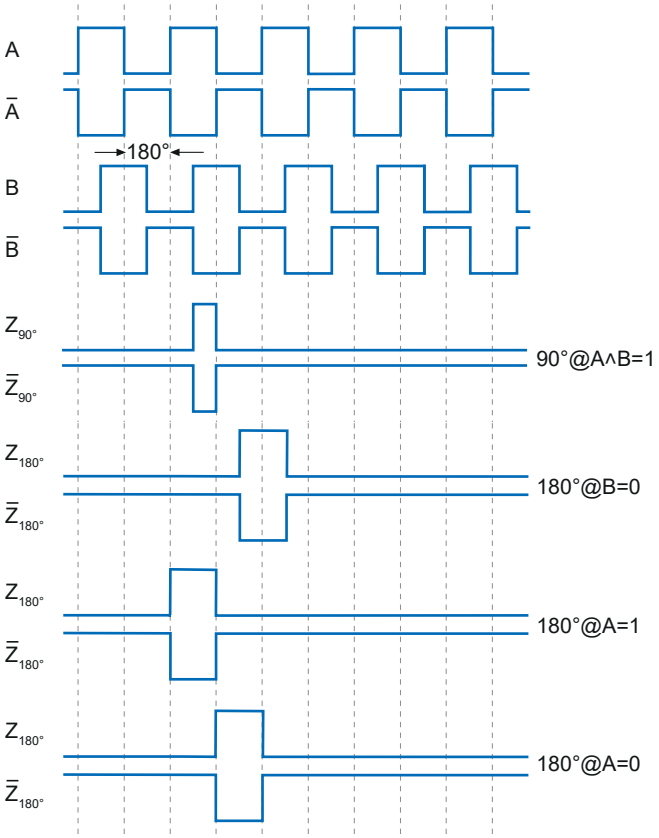

Ill. 7: Output signal behavior at positive direction of rotation

6.5 Optional LED indicator

Status LED/Error Output

LED indicator		Possible cause	Troubleshooting
	Flashing red	Overload output transistor or switch	Check event in BSS
	Red continuous	Boot-up error, low power supply, internal failure	Check event in BSS
	Flashing red and green	Limits exceeded (Temperature, Lifetime, Sensor light)	Check event in BSS
	Green continuous	Device OK, no rotation	–
	Flashing green	Device OK, Rotation	–

" *Baumer Sensor Suite (BSS)*" events in LOG field and troubleshooting

Message	Relevance	Description	Solution
Sensor status	LED brightness	Start-up error or defective LED	For restart disconnect power supply. If the problem remains, replace the encoder.
Sensor status	Initialization	Start-up error or insufficient power supply.	Check cables and power supply. For restart disconnect power supply. If the problem remains, replace the encoder.
Sensor status	Undervoltage	Internal error	For restart disconnect power supply. If the problem remains, replace the encoder.
Sensor status	Internal Interface	Internal error	Check cables and power supply. For restart disconnect power supply. If the problem remains, replace the encoder.
Sensor status	Sensor temperature limit	Sensor temperature range exceeded	Reduce supply voltage, depending on the encoder's operating temperature.
Output status	Incremental output in the event of overload	Temperature, signal frequency, cable length, or excessive load	Check ambient temperature, frequency, supply voltage and for potential cabling errors.
Output status	Overload switch	Temperature, signal frequency, cable length, or excessive load	Check ambient temperature, frequency, supply voltage and for potential cabling errors.

7 Disassembly

NOTICE

Equipment damage due to mechanical impact

Strong vibration may lead to overload by constraining force.

a) Never apply force. If properly performed, all components can be uninstalled smoothly.

b) Use only suitable tools to uninstall.

NOTICE

Equipment damage by adhering liquids

Sticky liquids may damage sensing unit and ball bearings. Disassembling a device which is stuck to the axis can lead to destruction.

a) Do not use adhesive liquids to fasten the device.

NOTICE

The device can be easily removed via the cheese-had screw (M8x45 mm, ISO 4762) and threaded pin (M6x10 mm, ISO 7436).

7.1 Uninstall encoder

Detaching the torque arm for direct mount

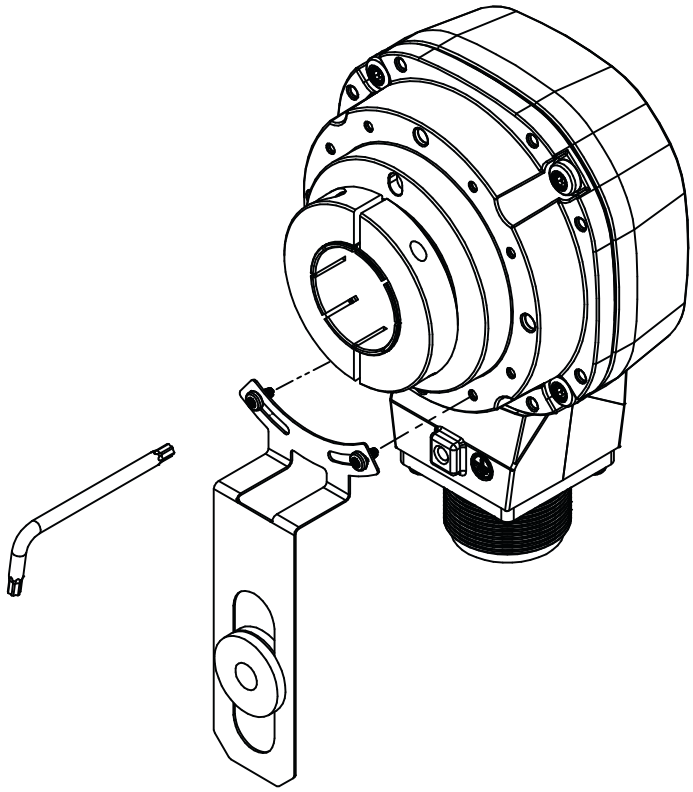

Ill. 8: Detaching the torque arm

Tool

- Torx 7IP

Instruction:

- Loosen the screws at housing and detach the torque arm.

Detaching the torque arm with variable length

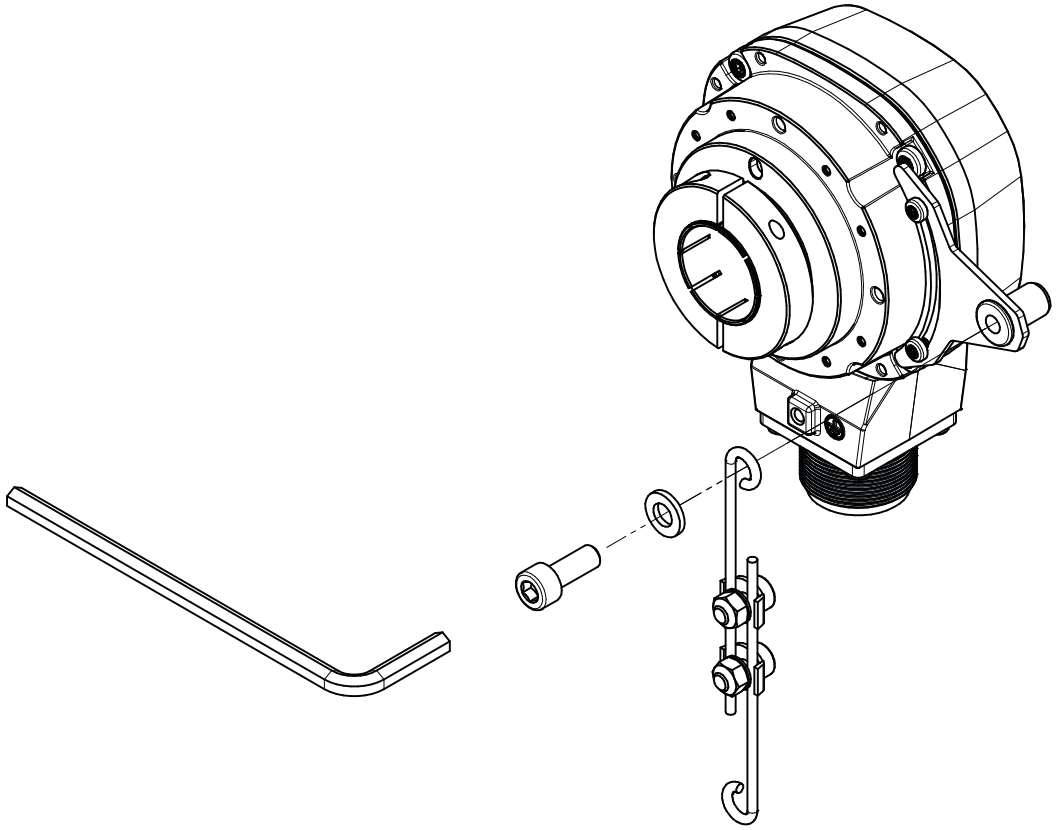

Ill. 9: Detaching the torque arm

Tool

- 5 mm
- 10 mm

Instruction:

- Loosen screw at torque arm.

Uninstall encoder – through-hollow shaft variants

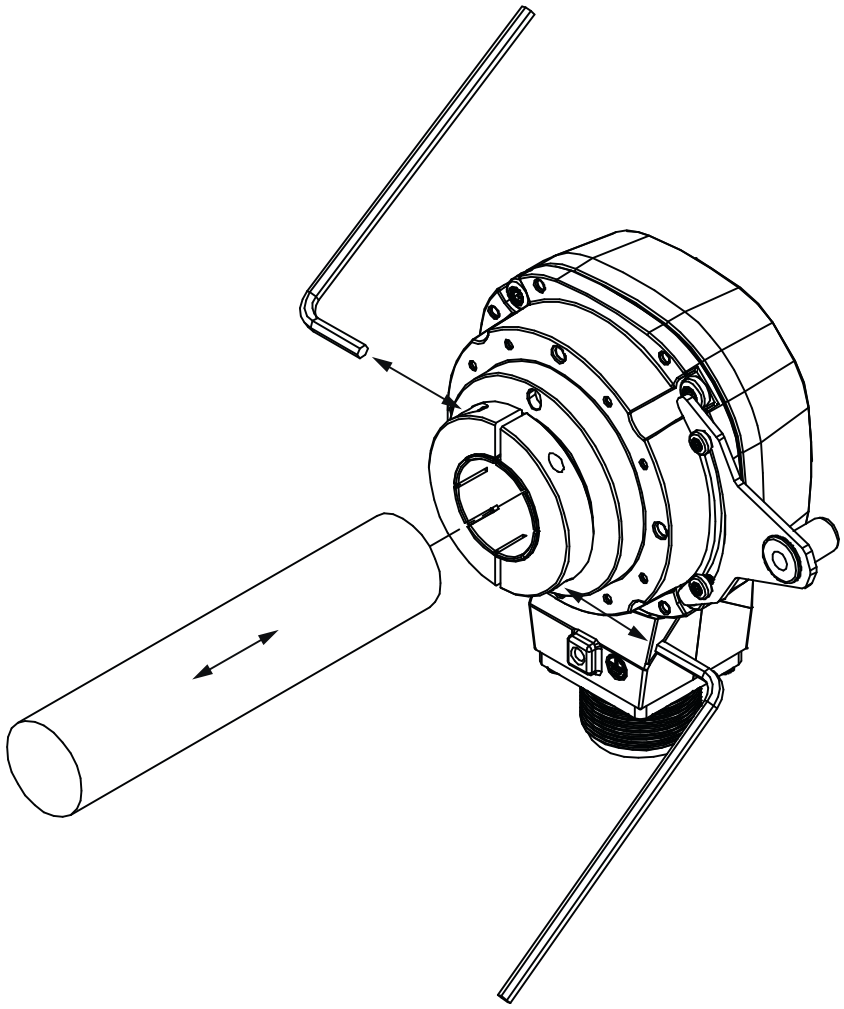

Ill. 10: Uninstall encoder

Tool

- 3 mm

Instruction:

a) Loosen a little bit the hex screws provided the clamping ring.
WARNING! Do not unscrew completely.

b) Loosen the self-locking nut at the torque arm.

c) Slide encoder off the shaft.

8 Maintenance

The device is maintenance-free. No special preventive maintenance is required. Any repair or maintenance work that require opening the device must be carried out by the manufacturer only.

9 Dimensional drawings

HS35P.IL

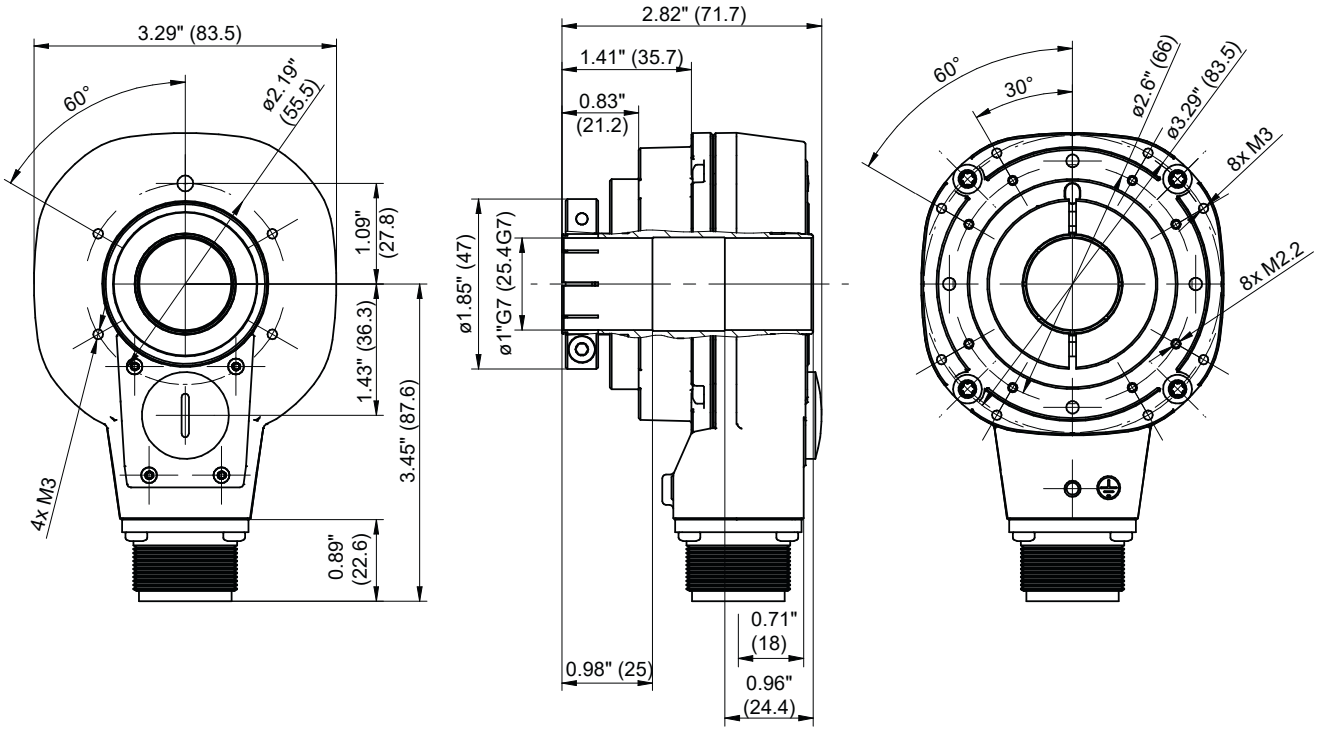

Ill. 11: Dimensions HS35P.IL (in mm, unless otherwise specified)

HS35.IL

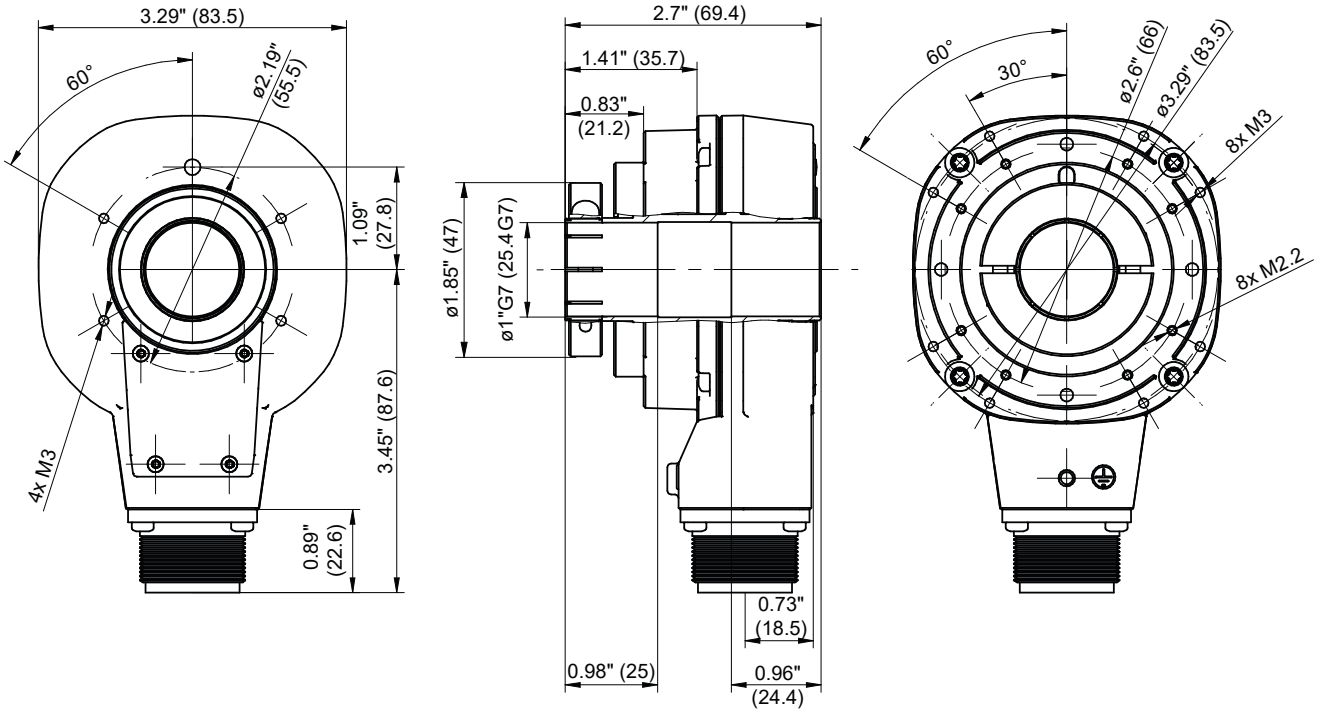

Ill. 12: Dimensions HS35.IL (in mm, unless otherwise specified)

List of illustrations

Ill. 1 Mounting accessories 8
Ill. 2 Torque arm with variable length 9
Ill. 3 Mounting the torque arm 10
Ill. 4 Mounting the encoder 12
Ill. 5 Cable connection 15
Ill. 6 Sensor cable HEK 8 18
Ill. 7 Output signal behavior at positive direction of rotation 19
Ill. 8 Detaching the torque arm 21
Ill. 9 Detaching the torque arm 22
Ill. 10 Uninstall encoder 23
Ill. 11 Dimensions HS35P.IL (in mm, unless otherwise specified) 25
Ill. 12 Dimensions HS35.IL (in mm, unless otherwise specified) 25

809606419

Baumer
Passion for Sensors

Baumer Germany GmbH & Co. KG
Bodenseeallee 7
DE-78333 Stockach
www.baumer.com