Baumer
Passion for Sensors

Inductive proximity sensor

IGYX 08P37B3/S35L

Inductive proximity switch

Article number: 11084732

Overview

- 2 mm
- 1,6 mm
- PNP break function (NC)
- connector M8
- -25 … 75 °C
- IP 67



Picture similar

Technical data

General data	
Mounting type	Flush
Nominal sensing distance Sn	2 mm
Assured sensing distance Sa	1.6 mm
Temperature drift	± 10 % of Sr (0 ... +60 °C)
Hysteresis	3 … 20 % of Sr
Output indicator	3 port LED red
Electrical data	
Switching frequency	3 kHz
Voltage supply range +Vs	10 … 30 VDC
Current consumption max. (no load)	15 mA
Output circuit	PNP break function (NC)
Voltage drop Vd	<2.5 VDC

Electrical data	
Output current	200 mA
Short circuit protection	Yes
Reverse polarity protection	Yes
Mechanical data	
Design	Cylindrical threaded
Material (sensing face)	PBT, red
Housing material	Stainless steel
Dimension	8 mm
Housing length	36 mm
Connection types	Connector M8
Tightening torque max.	5 Nm
Ambient conditions	
Operating temperature	-25 … +75 °C
Protection class	IP 67

Remarks

- Compliant with EMC requirements of EN 60947-5-2: 2007

The product features and technical data specified do not express or imply any warranty. Technical modifications subject to change.
2026-07-24

Inductive proximity sensor

IGYX 08P37B3/S35L

Inductive proximity switch

Article number: 11084732

Dimension drawing

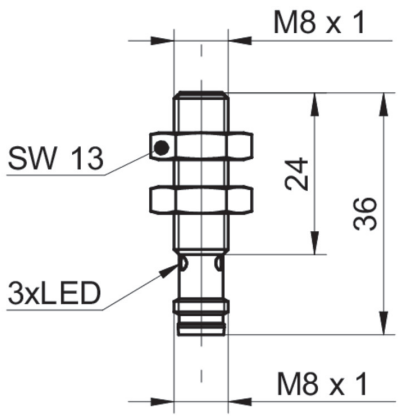

Connection diagram

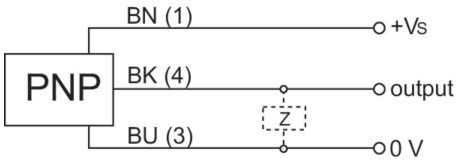

Accessories

Mounting accessories

10151719	Sensofix series 08 round

2026-07-24 The product features and technical data specified do not express or imply any warranty. Technical modifications subject to change.