Baumer
Passion for Sensors

Inductive proximity sensor

IGYX 12N37B3/S14L

Inductive proximity switch

Article number: 11084739

Overview

- 4 mm
- 3,2 mm
- NPN break function (NC)
- connector M12
- -25 … 75 °C
- IP 67



Picture similar

Technical data

General data	
Mounting type	Flush
Nominal sensing distance Sn	4 mm
Assured sensing distance Sa	3.2 mm
Temperature drift	± 10 % of Sr (0 ... +60 °C)
Hysteresis	3 … 20 % of Sr
Output indicator	3 port LED red
Electrical data	
Switching frequency	1.5 kHz
Voltage supply range +Vs	10 … 30 VDC
Current consumption max. (no load)	15 mA
Output circuit	NPN break function (NC)
Voltage drop Vd	<2.5 VDC

Electrical data	
Output current	200 mA
Short circuit protection	Yes
Reverse polarity protection	Yes
Mechanical data	
Design	Cylindrical threaded
Material (sensing face)	PBT, red
Housing material	Brass nickel plated
Dimension	12 mm
Housing length	50 mm
Connection types	Connector M12
Tightening torque max.	10 Nm
Ambient conditions	
Operating temperature	-25 … +75 °C
Protection class	IP 67

Remarks

- Compliant with EMC requirements of EN 60947-5-2: 2007

The product features and technical data specified do not express or imply any warranty. Technical modifications subject to change.
2026-07-24

Inductive proximity sensor

IGYX 12N37B3/S14L

Inductive proximity switch

Article number: 11084739

Dimension drawing

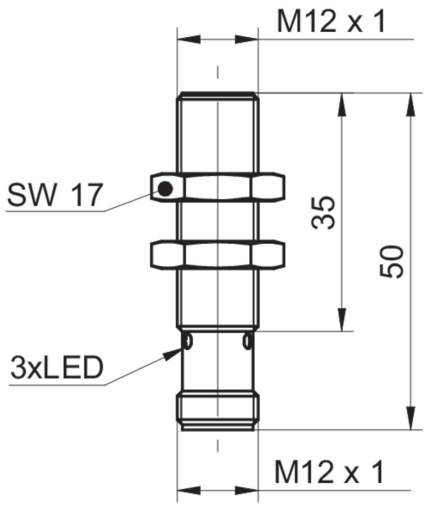

Connection diagram

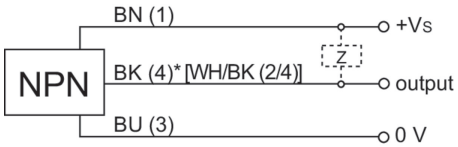

Accessories

Mounting accessories	
10151720	Sensofix series 12 round
11707685	Mounting rod with mounting plate holder 200 mm
11707686	Mounting rod with mounting plate holder 300 mm
11707688	Mounting rod 200 mm
11707697	Mounting rod 250 mm
11707698	Mounting rod with mounting plate holder 250 mm
11707687	Mounting rod 300 mm
11707701	Mounting plate series 300 and ø12 mm
11707702	Mounting base
11707703	Two-way connector

2026-07-24 The product features and technical data specified do not express or imply any warranty. Technical modifications subject to change.