Baumer
Passion for Sensors

Inductive proximity sensor

# IGYX 18P17B3/L

Inductive proximity switch

Article number: 11078866

## Overview

- 8 mm
- 6,4 mm
- PNP make function (NO)
- cable, 2 m
- -25 … 75 °C
- IP 67



*Picture similar*

## Technical data

| General data | |
|---|---|
| Mounting type | Quasi-flush |
| Nominal sensing distance Sn | 8 mm |
| Assured sensing distance Sa | 6.4 mm |
| Temperature drift | ± 10 % of Sr (0 ... +60 °C) |
| Hysteresis | 3 … 20 % of Sr |
| Output indicator | LED red |
| **Electrical data** | |
| Switching frequency | 400 Hz |
| Voltage supply range +Vs | 10 … 30 VDC |
| Current consumption max. (no load) | 15 mA |
| Output circuit | PNP make function (NO) |
| Voltage drop Vd | <2.5 VDC |

| Electrical data | |
|---|---|
| Output current | 200 mA |
| Short circuit protection | Yes |
| Reverse polarity protection | Yes |
| **Mechanical data** | |
| Design | Cylindrical threaded |
| Material (sensing face) | PBT, red |
| Housing material | Brass nickel plated |
| Dimension | 18 mm |
| Housing length | 50 mm |
| Connection types | Cable, L=2 m |
| Tightening torque max. | 25 Nm |
| **Ambient conditions** | |
| Operating temperature | -25 … +75 °C |
| Protection class | IP 67 |

## Remarks

- Compliant with EMC requirements of EN 60947-5-2: 2007

The product features and technical data specified do not express or imply any warranty. Technical modifications subject to change.
2026-07-24

Inductive proximity sensor

# IGYX 18P17B3/L

Inductive proximity switch

Article number: 11078866

## Dimension drawing

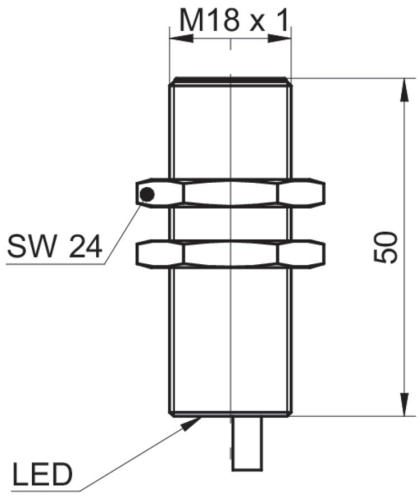


## Connection diagram

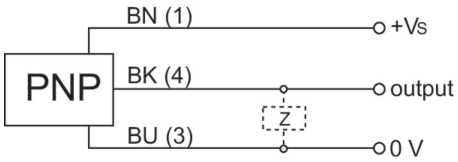


## Accessories

| Mounting accessories | |
|---|---|
| 10151658 | Sensofix series 18 |
| 11172096 | ZADAP-M18.STANDARD |
| 11171584 | ZADAP-M18.SHORT |
| 11172095 | ZADAP-M18.LONG |
| 11707685 | Mounting rod with mounting plate holder 200 mm |
| 11707686 | Mounting rod with mounting plate holder 300 mm |
| 11707688 | Mounting rod 200 mm |
| 11707697 | Mounting rod 250 mm |
| 11707698 | Mounting rod with mounting plate holder 250 mm |
| 11707687 | Mounting rod 300 mm |
| 11707699 | Mounting plate series 500 and ø18 mm |
| 11707702 | Mounting base |
| 11707703 | Two-way connector |

2026-07-24 The product features and technical data specified do not express or imply any warranty. Technical modifications subject to change.