Baumer
Passion for Sensors

Inductive proximity switch

IR18.P12S-N50.NC1Z.7BCV

Article number: 11726379

Overview

- Cylindrical standard housing for versatile use
- Non-flush design for an increased sensing distance
- Lowest serial dispersion due to end-of-line calibration
- Robust even in demanding environments
- Temperature and long-term stable switching behavior



Picture similar

Technical data

General data	
Mounting type	Non-flush
Nominal sensing distance Sn	12 mm
Assured sensing distance Sa	≤ 81 % of Sn
Real sensing distance Sr	± 10 % von Sn
Temperature drift	± 10 % of Sr
Hysteresis	3 … 20 % of Sr
Output indicator	LED red
Correction factor typ.	Mild steel 100 %, stainless steel 90 %, aluminum 55 %, copper 50 %
Reference object	Fe360 36 x 36 x 1 mm
Electrical data	
Switching frequency	400 Hz
Voltage supply range +Vs	6 … 36 VDC
Current consumption max. (no load)	10 mA
Output circuit	NPN break function (NC)
Voltage drop Vd	<2 VDC
Output current	200 mA
Short circuit protection	Yes
Reverse polarity protection	Yes
Mechanical data	
Housing material	Brass nickel plated

Mechanical data	
Housing length	50 mm
Connection types	Cable, L=2 m
Tightening torque max.	40 Nm
Weight	92 g
Ambient conditions	
Operating temperature	-25 … +75 °C
Storage temperature	-25 … +75 °C
Protection class	IP 67
Vibration resistance	IEC 60068-2-6:2008 10 g at f = 10 - 2000 Hz, duration 150 min per axis
Shock resistance	IEC 60068-2-27:2009 100 g / 6 ms, 10 jolts per axis and direction
Safe maximum values	
MTTF	1447 years
Diagnostic coverage (DC)	0 %
Cable	
Cable length	200 cm
Shielded	No
External sheath: Material	PVC
Cable diameter	4.2 mm
Wire cross section	0.25 mm²
Insulation: Material	PVC
Bending radius (fixed)	5 × outer diameter
Bending radius (mobile)	10 × outer diameter

2024-11-08 The product features and technical data specified do not express or imply any warranty. Technical modifications subject to change.

Inductive proximity switch

IR18.P12S-N50.NC1Z.7BCV

Article number: 11726379

Dimension drawing

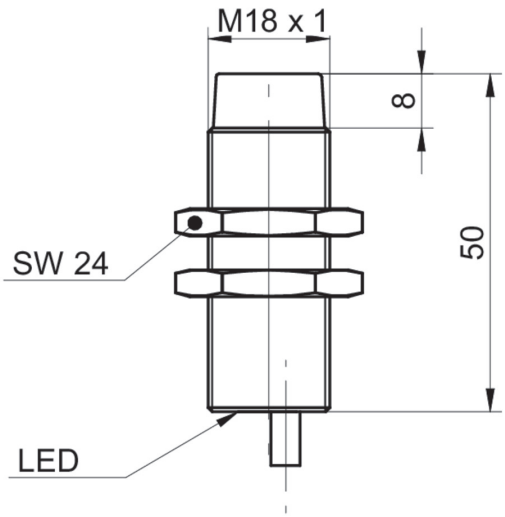

Connection diagram

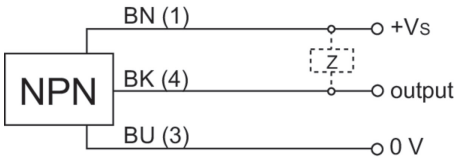

Response diagram

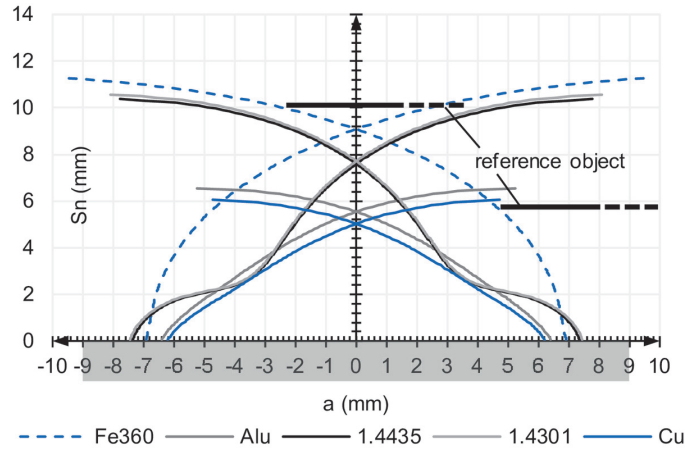

2024-11-08 The product features and technical data specified do not express or imply any warranty. Technical modifications subject to change.

IR18.P12S-N50.NC1Z.7BCV

Article number: 11726379

Accessories	
Mounting accessories	
10151658	Sensofix series 18
11172096	ZADAP-M18.STANDARD
11171584	ZADAP-M18.SHORT
11172095	ZADAP-M18.LONG
11707685	Mounting rod with mounting plate holder 200 mm
11707686	Mounting rod with mounting plate holder 300 mm
11707688	Mounting rod 200 mm
11707697	Mounting rod 250 mm
11707698	Mounting rod with mounting plate holder 250 mm
11707687	Mounting rod 300 mm
11707699	Mounting plate series 500 and ø18 mm
11707702	Mounting base
11707703	Two-way connector

2024-11-08 The product features and technical data specified do not express or imply any warranty. Technical modifications subject to change.