Baumer
Passion for Sensors

Flow sensor/FlexFlow

PFT23-11.020.G085.20.0.0000.0

Article number: 11738140

Overview

- Flow and temperature measurement in a single sensor
- Binary or analog output signal
- Compact and robust
- Available with IO-Link interface



Picture similar

Technical data

Performance characteristics	
Down time at temperature step	< 10 s
Max. measuring error	± 2 % FSR ± 3 % MV , water ± 0.5 °C , temperature measurement @ flow > 0 cm/s
Measuring range, flow	10 … 400 cm/s , water
Measuring range, temperature	-25 … 150 °C
Step response time	< 5 s
Process conditions	
Process temperature	-25 … 125 °C , water -25 … 150 °C , temperature measurement @ flow > 0 cm/s
Process pressure	-1 … 100 bar
Process connection	
Connection variants	G 1/2 A ISO 228-1 with cone
Mounting position	Any, top, bottom, side
Wetted parts material	AISI 316L (1.4404)
Surface roughness wetted parts	Ra ≤ 0.8 µm
Ambient conditions	
Operating temperature range	-25 … 80 °C
Storage temperature range	-25 … 80 °C
Degree of protection (EN 60529)	IP67 , with appropriate cable IP69K , with appropriate cable

Ambient conditions	
Humidity	≤ 100 % RH , condensing
Shock (EN 60068-2-27)	50 g / 11 ms, 100 g / 6 ms, 10 impulses per axis and direction
Vibration (sinusoidal) (EN 60068-2-6)	1.5 mm p-p (10 … 58 Hz), 10 g (58 Hz … 2 kHz), 10 cycles (2.5 h) per axis
Output signal	
Output type	4...20 mA
Current rating	100 mA , max.
Residual current	< 250 µA
Short circuit protection	Yes
IO-Link interface	
IO-Link version	1.1
Housing	
Style	Compact transmitter
Overall size	Refer to section "Dimensional drawings"
Material	AISI 316L (1.4404)
Electrical connection	
Connector	M12-A, 5-pin
Power supply	
Voltage supply range	12 … 32 V DC
Power consumption	≤ 2.5 W
Power-up time	10 s , max.
Reverse polarity protection	Yes

2026-10-27 The product features and technical data specified do not express or imply any warranty. Technical modifications subject to change.

PFT23-11.020.G085.20.0.0000.0

Article number: 11738140

Dimensional drawings (mm)

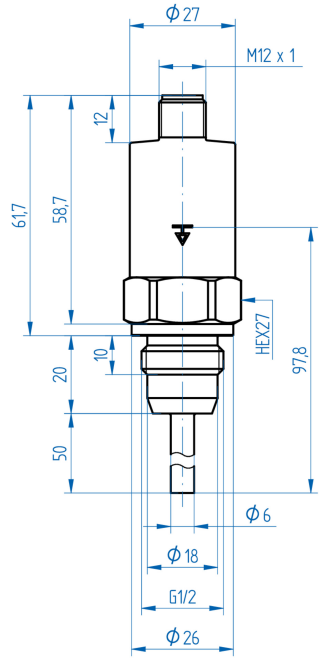

G08-G085
G 1/2 A ISO 228-1 with cone
Sensor length 50 mm (BCID: G08)

Electrical connection

Electrical connection	Equivalent circuit	Function	Pin assignment
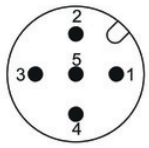	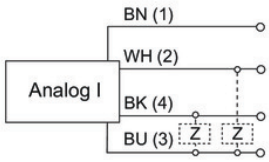	+Vs	1
		Iout (flow)	2
		Iout (temperatur)	4
		n.c.	5
		GND (0 V)	3

2026-10-27 The product features and technical data specified do not express or imply any warranty. Technical modifications subject to change.