Baumer
Passion for Sensors

Flow sensor/FlexFlow

PFT23-51.010.G081.20.4.0000.0

Article number: 11738193

Overview

- Flow and temperature measurement in a single sensor
- Binary or analog output signal
- Compact and robust
- Available with IO-Link interface



Picture similar

Technical data

Performance characteristics	
Down time at temperature step	< 10 s
Max. measuring error	± 2 % FSR ± 3 % MV , water ± 15 % FSR , oil ± 0.5 °C , temperature measurement @ flow > 0 cm/s
Measuring range, flow	10 … 400 cm/s , water 10 … 400 cm/s , glycol 10 … 300 cm/s , oil
Measuring range, temperature	-25 … 150 °C
Step response time	< 5 s
Process conditions	
Process temperature	-25 … 125 °C , water 0 … 90 °C , oil -25 … 150 °C , temperature measurement @ flow > 0 cm/s
Process pressure	-1 … 100 bar
Process connection	
Connection variants	G 1/2 A ISO 228-1 with cone
Mounting position	Any, top, bottom, side
Wetted parts material	AISI 316L (1.4404)
Surface roughness wetted parts	Ra ≤ 1.6 µm
Ambient conditions	
Operating temperature range	-25 … 80 °C
Storage temperature range	-25 … 80 °C
Degree of protection (EN 60529)	IP67 , with appropriate cable IP69K , with appropriate cable
Humidity	≤ 100 % RH , condensing

Ambient conditions	
Shock (EN 60068-2-27)	50 g / 11 ms, 100 g / 6 ms, 10 impulses per axis and direction
Vibration (sinusoidal) (EN 60068-2-6)	1.5 mm p-p (10 … 58 Hz), 10 g (58 Hz … 2 kHz), 10 cycles (2.5 h) per axis
Output signal	
Output type	Digital (push-pull)
Switching logic	Active high Active low Normally closed (NC) Normally open (NO)
Voltage drop	< 2.5 V, switching output
Current rating	100 mA , max.
Residual current	< 250 µA
Short circuit protection	Yes
Interface	IO-Link 1.1
IO-Link interface	
IO-Link version	1.1
Device profile	Smart Sensor Profile
Baud rate	38,4 kbaud (COM2)
Process data (cyclic)	Actual measuring range Device Status
Housing	
Style	Compact transmitter
Overall size	Refer to section "Dimensional drawings"
Material	AISI 316L (1.4404)
Electrical connection	
Connector	M12-A, 4-pin
Power supply	
Voltage supply range	18 … 30 V DC
Power consumption	≤ 7.5 W

2026-10-27 The product features and technical data specified do not express or imply any warranty. Technical modifications subject to change.

PFT23-51.010.G081.20.4.0000.0

Article number: 11738193

Technical data

Power supply		Power supply	
Power-up time	10 s , max.	Reverse polarity protection	Yes

Dimensional drawings (mm)

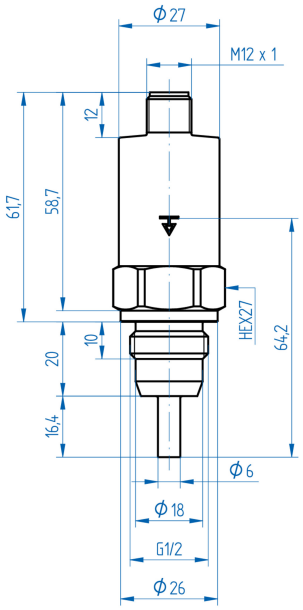

G08-G081
G 1/2 A ISO 228-1 with cone
Sensor length 16.4 mm (BCID: G08)

Electrical connection

Electrical connection	Equivalent circuit	Function	Pin assignment
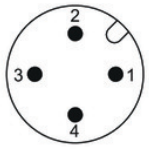	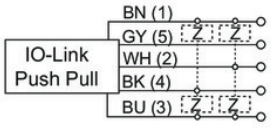	+Vs	1
		SW2	2
		SW1 (IO-Link)	4
		GND (0 V)	3

2026-10-27 The product features and technical data specified do not express or imply any warranty. Technical modifications subject to change.

PFT23-51.010.G081.20.4.0000.0

Article number: 11738193

2026-10-27 The product features and technical data specified do not express or imply any warranty. Technical modifications subject to change.