Baumer
Passion for Sensors

Pressure sensor

PP10R

PP10R-1.3###R.####.##2#00.050

Overview

- Tested according to EN 50155
- Relative pressure measurement from -1 to 50 bar
- Robust ceramic measuring cell
- Stainless steel housing
- Compact design
- Relative pressure and vacuum measurement
- Designed for a wide range of railway applications as e.g. pantograph pressure control, coolant recirculating pumps and pneumatic and hydraulic brake systems



Picture similar

CE EN 50155

Technical data

Performance characteristics	
Pressure type	Relative (gauged)
Compensated temperature range	-25 … 85 °C
Long term stability	≤ 0.3 % FSR/a
Max. measuring error	± 1.5 % FSR Including zero-point and span error, nonlinearity (by terminal base line), hysteresis and non-repeatability (EN 61298-2)
Max. measuring span	50 bar
Measuring range	-1 … 50 bar
Step response time	≤ 5 ms
Standard error of measurement (BFSL)	± 0.5 % FSR Including non-linearity, hysteresis and non-repeatability according BFSL
Min. measuring span	1.0 bar
Power-up time	≤ 25 ms
Temperature coefficient	≤ 0.15 % FSR/10 K , measuring span ≤ 0.3 % FSR/10 K , zero point
Process conditions	
Process temperature	-40 … 100 °C -25 … 85 °C With NBR seal: -40 … 85 °C With EPDM seal: -20 … 85 °C With FKM seal:
Process pressure	Refer to section "Operating conditions"
Process connection	
Connection variants	Refer to section "Dimensional drawings"
Wetted parts material, process connection	AISI 316L (1.4404)
Wetted parts material, membrane	Ceramic, 96% AL2O3

Process connection	
Wetted parts material, gasket	NBR EPDM, optional FKM, optional, gaskets require a minimum ambient temperature of -20 °C and a minimum medium temperature of -25 °C
Ambient conditions	
Operating temperature range	-40 … 85 °C
Storage temperature range	-40 … 85 °C
Degree of protection (EN 60529)	IP 65 , with connector DIN EN 175301-803 A (DIN 43650 A), 4-pin IP 67 , with connector M12-A, 4-pin
Insulation resistance	> 100 MΩ 0 , 500 V DC
Insulation voltage	1 kV AC 0 , EN 50155
Shock and vibration tests (EN 61373:1999, 2010)	Category 2
Output signal	
Current output	4 … 20 mA , 2-wire
Voltage output	0 … 10 V 1 … 5 V
Load resistance	> 2 kΩ, with voltage output R ≤ (V DC - 10 V)/20 mA, with current output
Short circuit protection	Yes
Housing	
Style	Compact transmitter
Overall size	Refer to section "Dimensional drawings"
Material	AISI 304 (1.4301)

2026-09-04 The product features and technical data specified do not express or imply any warranty. Technical modifications subject to change.

Pressure sensor

PP10R

PP10R-1.3###R.####.##2#00.050

Technical data

Electrical connection

Connector	DIN EN 175301-803 A (DIN 43650 A), 4-pin M12-A, 4-pin

Power supply

Voltage supply range	10 … 30 V DC , with 4 … 20 mA output signal 15 … 30 V DC , with 0 … 10 V output signal 15 … 30 V DC , with 1 … 5 V output signal

Compliance and approvals

EMC	EN 50121-3-2
Railway applications	EN 50155 EN 61373
Fire protection	EN 45545-2

Operating conditions

Measuring range (bar)	Proof pressure (bar)	Burst pressure (bar)
0 … 1 0 … 1,6	4	6
0 … 2,5 0 … 4	10	20
0 … 6 0 … 10	20	35
0 … 16	40	60
0 … 25 0 … 40 0 … 50	100	140

Dimensional drawings (mm)

Housing

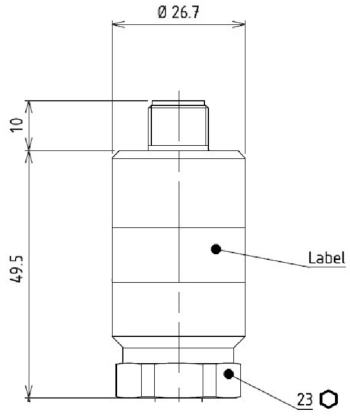

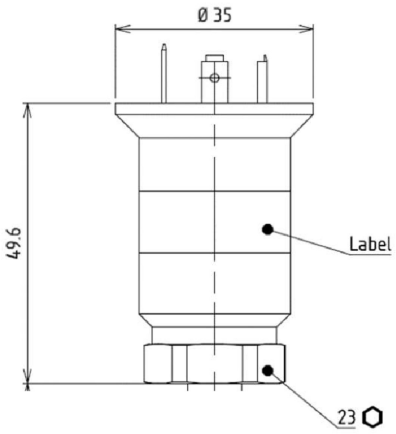

2026-09-04 The product features and technical data specified do not express or imply any warranty. Technical modifications subject to change.

PP10R

PP10R-1.3###R.####.##2#00.050

Dimensional drawings (mm)

Process connection

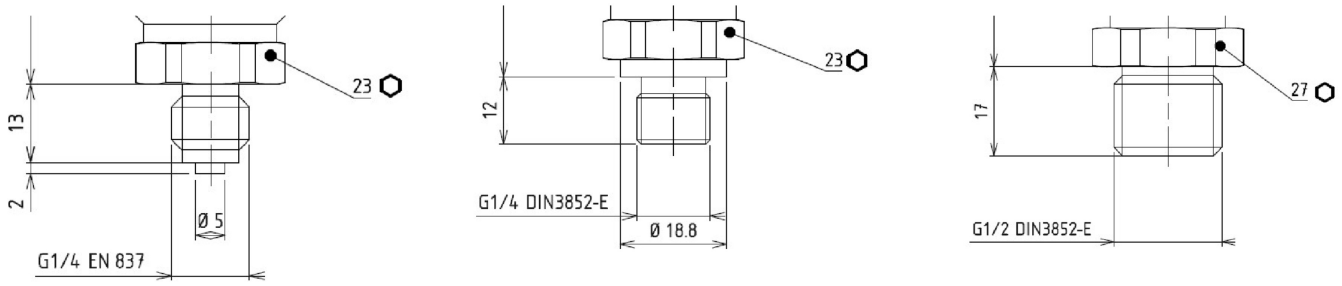

Electrical connection

Output type	Equivalent circuit	Electrical connection	Function	Pin assignment
4 … 20 mA (2-wire)	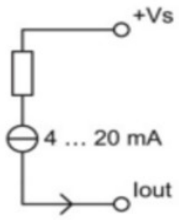		+Vs Iout Frame ground n.c.	1 3 Plug thread, 4 2
		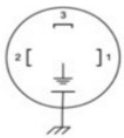	+Vs Iout Frame ground n.c.	1 2 Grounding lug 3
0 … 10 V 1 … 5 V (3-wire)	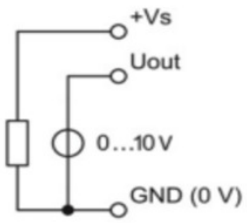	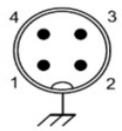	+Vs Uout GND (0 V) Frame ground	1 2 3 Plug thread, 4
		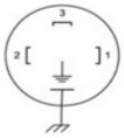	+Vs Uout GND (0 V) Frame ground	1 2 3 Grounding lug

Ordering information

Ordering key - Configuration possibilities see website

	PP10R	1	.	3	###	R	.	##	##	.	##	2	#	0	0	.	0	5	0
Product																			
pressure sensor PP10R	PP10R																		
Housing material																			
SS 1.4301 AISI 304		1																	
Accuracy																			
±0.5 % FS				3															

2026-09-04 The product features and technical data specified do not express or imply any warranty. Technical modifications subject to change.

PP10R

PP10R-1.3###R.####.##2#00.050

Ordering information

Ordering key - Configuration possibilities see website

	PP10R	1	.	3	###	R	.	##	##	.	##	2	#	0	0	.	0	5	0
Measuring range																			
0 ... 1 bar (EN)					B15														
0 ... 1,6 bar (EN)					B16														
0 ... 2.5 bar (EN)					B18														
0 ... 4 bar (EN)					B19														
0 ... 6 bar (EN)					B20														
0 ... 10 bar (EN)					B22														
0 ... 16 bar (EN)					B24														
0 ... 25 bar (EN)					B26														
0 ... 40 bar (EN)					B27														
0...50 bar (EN)					B28														
Kind of pressure																			
Relative (gauged)						R													
Output signal																			
4...20 mA								A1											
0...10 V								A2											
1...5 V								A3											
Output Connection																			
M12-A, 4-pin									14										
DIN EN 175301-803 A (DIN 43650 A), 4-pin									44										
Process connection																			
G 1/4 B EN 837-1 (G30)											02								
G 1/4 A DIN EN ISO 1179-2 (3852-E) (G50)											06								
G 1/2 A DIN EN ISO 1179-2 (3852-E)(G51)											09								
Process connection material																			
Stainless steel 1.4404 AISI 316L												2							
Seal																			
NBR standard													1						
EPDM													2						
FKM													3						
Oil filling																			
Without														0					
Display																			
Without															0				
ATEX																			
Without																	0		
Approvals																			
Railway (EN 50155)																		5	
Configuration																			
No configuration																			0

2026-09-04 The product features and technical data specified do not express or imply any warranty. Technical modifications subject to change.