Baumer
Passion for Sensors

Ultrasonic proximity sensor

U500.PA5.2-GP1J.72F

Article number: 11728241

Overview

- 20 … 1500 mm
- Push-pull
- qTeach, line-Teach, IO-Link
- Connector M12, 5-pin
- -25 … 65 °C
- Protection IP 67



Picture similar

Technical data

General data	
Scanning range Sd	20 … 1500 mm
Scanning range far limit Sde	20 … 1500 mm
Version	IO-Link Multiplex version
Hysteresis typ.	4 % Sde
Repeat accuracy	0.5 mm
Temperature drift	< 2 % Sde
Power-up drift	Compensated after 15 min.
Response time ton	< 40 ms
Release time toff	< 40 ms
Sonic frequency	200 kHz
Adjustment	qTeach, line-Teach, IO-Link
Light indicator	LED yellow
Power on indication	LED green
Alignment measuring axis	< 2°
Electrical data	
Voltage supply range +Vs	12 … 30 VDC
Current consumption typ.	35 mA
Output circuit	Push-pull
Output current	100 mA
Voltage drop Vd	<3.5 VDC
Residual ripple	< 10 % Vs
Short circuit protection	Yes
Reverse polarity protection	Yes
Communication interface	
Interface	IO-Link V1.1
Baud rate	38.4 kBaud (COM 2)

Communication interface	
Cycle time	≥ 12 ms
IO-Link port type	Class A
Additional data	Distance Excess gain Operating cycles Operating hours Boot cycles Operating voltage Device temperature Histograms
Adjustable parameters	Time filters LED status indicators Output logic Output circuit Counter Beam forming Function of pin 5 Deactivate the sensor element Find Me function
Mechanical data	
Design	Rectangular
Housing material	Plastic (ASA, PMMA)
Coating active face	PEEK
Width / diameter	18 mm
Height / length	45 mm
Depth	32 mm
Connection types	Connector M12 5 pin
Ambient conditions	
Operating temperature	-25 … +65 °C
Storage temperature	-40 … +75 °C
Protection class	IP 67

2026-09-07 The product features and technical data specified do not express or imply any warranty. Technical modifications subject to change.

Ultrasonic proximity sensor

U500.PA5.2-GP1J.72F

Article number: 11728241

Dimension drawing

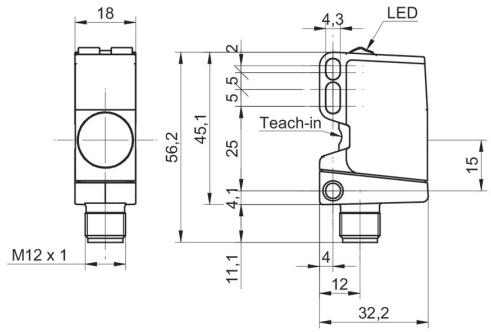

Connection diagram

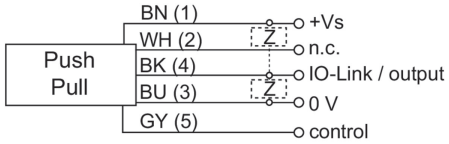

Pin assignment

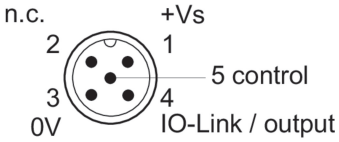

Typical sonic cone profile

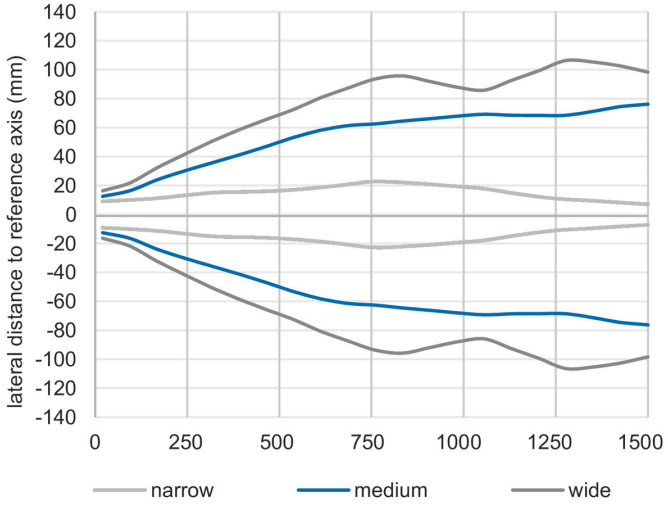

object distance (So) from sensor front (mm)
standard target with 30 x 30 mm, directed rectangular to sensor's reference axis

2026-09-07 The product features and technical data specified do not express or imply any warranty. Technical modifications subject to change.

Accessories

Mounting accessories	
11099942	Sensofix O500/U500
11092246	Mounting bracket O500/U500
11111164	Mounting bracket O500/U500 - Retrofit
11707685	Mounting rod with mounting plate holder 200 mm
11707686	Mounting rod with mounting plate holder 300 mm
11707688	Mounting rod 200 mm
11707697	Mounting rod 250 mm
11707698	Mounting rod with mounting plate holder 250 mm
11707687	Mounting rod 300 mm
11707699	Mounting plate series 500 and ø18 mm
11707702	Mounting base
11707703	Two-way connector

Peripherals	
11261571	CM50I.PN-11261571
11261572	CM50I.EC-11261572
11261573	CM50I.EIP-11261573
11084377	ZTEST-ALL.DIGITAL
11084376	ZTEST-ALL.ANALOG
11111163	Sonic beam deflector L U500
11234828	USB-C IO-Link Master

2026-09-07 The product features and technical data specified do not express or imply any warranty. Technical modifications subject to change.