Through beam sensors

FSDK 10D9001/KS35

dimension drawing

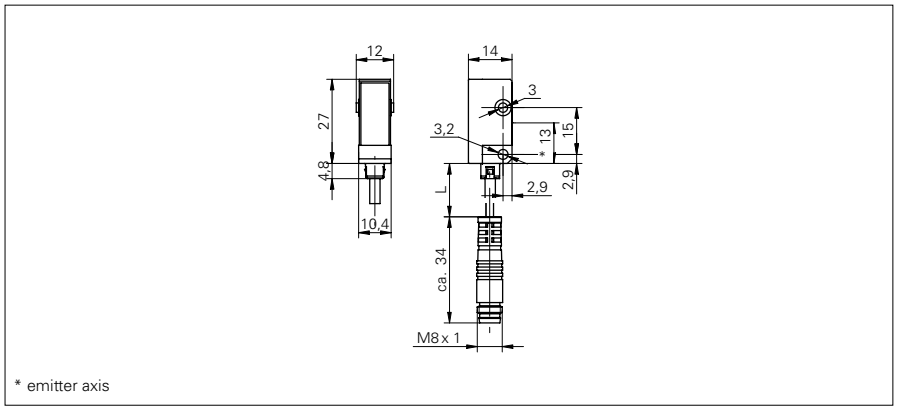

general data

type	through beam sensor
emitter / receiver	emitter
light source	pulsed red LED
actual range Sb	5 m
nominal range Sn	6 m
wave length	660 nm

electrical data

voltage supply range +Vs	10 ... 30 VDC
current consumption max.	23 mA
current consumption typ.	15 mA
reverse polarity protection	yes

mechanical data

width / diameter	10,4 mm
height / length	27 mm
depth	14 mm
type	rectangular
housing material	plastic (ASA)
front (optics)	PMMA
connection types	flylead connector M8, 3 pin

ambient conditions

operating temperature	-25 ... +65 °C
protection class	IP 65

photo



connection diagram

