Through beam sensors

FSDK 14D9601/S35A

dimension drawing

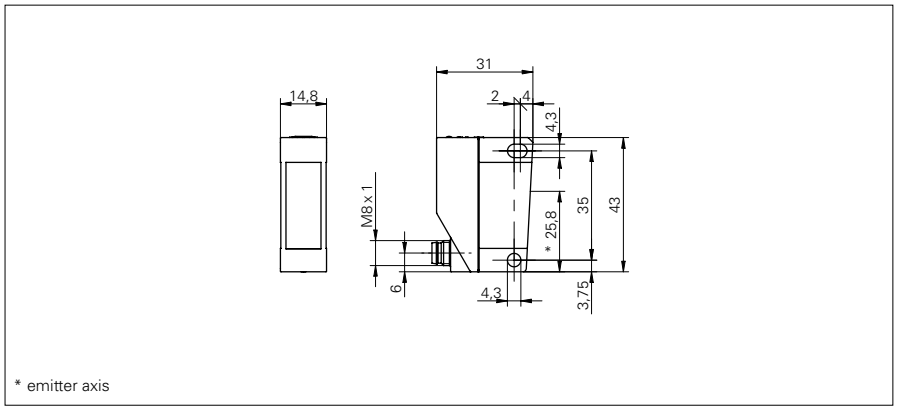

general data	
type	through beam sensor
emitter / receiver	emitter
light source	pulsed red LED
actual range Sb	12 m
nominal range Sn	15 m
wave length	660 nm

electrical data	
voltage supply range +Vs	10 ... 30 VDC
current consumption max.	20 mA
current consumption typ.	12 mA
reverse polarity protection	yes

mechanical data	
width / diameter	14,8 mm
height / length	43 mm
depth	31 mm
type	rectangular
housing material	plastic (PA12)
front (optics)	PA
connection types	connector M8, 4 pin

ambient conditions	
operating temperature	-25 ... +65 °C
protection class	IP 67

photo



connection diagram

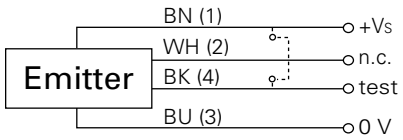

- emitter without LED